Bola® Bike Rack
Installation Guide

Date: March 2, 2022
www.landscapeforms.com Ph: 800.521.2546

Embedded

HANDLE WITH CARE! Bola's finish can be scuffed by contact with tools, concrete, or other abrasive surfaces. Protect the finish from damage during installation. Use touch-up paint to repair any powder coat finish abrasions.

INSTALLATION:
1. Core drill 3" diameter (minimum) holes 6" deep.
2. Prepare the holes for outdoor anchoring cement, such as Kwixset ™ or Super Por-rok ®. Follow the manufacturer's instructions for blowing out dust, filling with water, scrubbing, and removing excess water.
3. Place the bike rack back into position and fill the holes with anchoring cement.
4. Wipe away any excess before it cures.

Tools Required

• Unit ships assembled

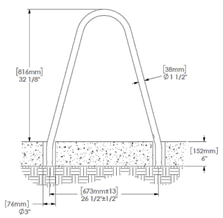

Side Elevation, showing core drill sizes

landscapeforms

Page 1 of 1

Bicycle Rack Detail

Chase Park Litter Receptacle
Installation Guide

Date: September 19, 2019
www.landscapeforms.com Ph: 800.521.2546

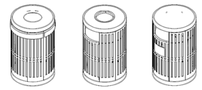

Tools Required

- Safety glasses
- Litter receptacle ships fully assembled. Freestanding unit can be set in place.
- Anchoring hardware for surface mount option: Two anchors, 3/8" [10mm] diameter or less, and two washers, 7/8" [23mm] o.d. are required per unit. The base thickness is 7/8" [22mm] at anchor location. The roto-molded base will compress about 1/8" upon tightening of the anchor bolts. The installer is responsible for anchoring hardware suitable for site conditions. Corrosion-resistant anchors are recommended.

PROCEDURE FOR INSTALLATION:

FOR SURFACE MOUNTED LITTER RECEPTACLE:

1. Place the unit in the desired position. Open the door to check clearance.
2. Remove the liner and mark anchor location through the holes in the base.
3. Move the unit to allow access for the drilling holes.
4. Drill holes at marked location according to anchor manufacturer's specification.
5. Complete the anchor installation according to the anchor manufacturer's instructions.
6. Lid and base attachment hardware and anchoring hardware should be checked annually and tightened as necessary.

ASSEMBLE WITH CARE! Pangard III® Polyester Powdercoat is a strong, long-lasting finish. To protect this finish during assembly, place unwrapped powdercoated parts on packaging foam or other non-marring surface. Do not place or slide powdercoated parts on concrete or other hard or textured surface – this will damage the finish causing rust to occur. Use touch-up paint on any gouges in the finish caused by assembly tools.

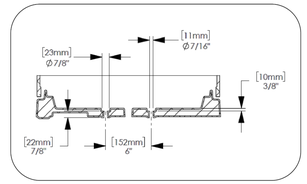

Fig. 1 – section view of base

landscapeforms

Page 1 of 1

Trash / Recycle Bin Detail

SANTA & COLE Harpo Bench and Lounge chair
Installation Guide

Date: February 06, 2018
www.landscapeforms.com Ph: 800.521.2546

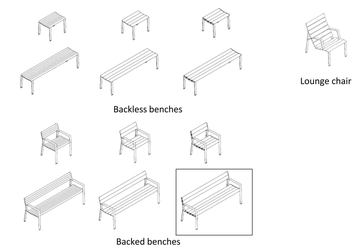

Included components:

4x – anchor bolts
Embedded option

Tools required:

- Hammer drill with masonry bit for surface mount or embedded

ASSEMBLE WITH CARE! Pangard III® Polyester Powdercoat is a strong, long-lasting finish. To protect this finish during assembly, place unwrapped powdercoated parts on packaging foam or other non-marring surface. Do not place or slide powdercoated parts on concrete or other hard or textured surface – this will damage the finish causing rust to occur. Use touch-up paint on any gouges in the finish caused by assembly tools.

landscapeforms

INSTALLATION:

EMBEDDED INSTALLATION:
Note: Each embedded bench or lounge chair is shipped with (4) M10 x 120mm threaded rods. For mounting to existing concrete. An adhesive anchoring system (Hilti HIT RE 500 or Powers Fasteners AC100 Plus™) is recommended.
1. Place bench or lounge chair upside down on non-marring material.
2. Install threaded rods in each support. See Fig. 2.
3. Place unit in position.
4. Mark hole locations by tracing around threaded rods.
5. Move unit to allow access for drilling holes.
6. Hammer drill 5/8" holes, 4-1/2" deep.
7. Clear holes of debris using 1" diameter nylon brush and compressed air. Hole must be free of standing water or ice.
8. Test fit unit to make sure threaded rods are not resting on the bottom of the holes.
9. Fill holes with adhesive, following manufacturer's instructions. Fill holes from the bottom up to avoid air pockets. Fill to a level 1" from the top of the hole.
10. Set the unit in the installed position. Do not disturb the unit during cure time.
11. Wipe away excess adhesive before it cures.

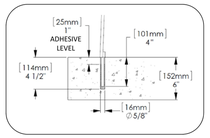

Fig. 2 – Embedded rod detail

Page 1 of 1

Bench Detail

Seger architects, inc
83 North Street
Salem, Massachusetts 01970
Telephone: 978-744-0208
www.segerarchitects.com

PROJECT ARCHITECT

SEAL

landworks studio inc

LANDSCAPE ARCHITECT

PROJECT CONSULTANTS

MARINA AT AMESBURY POINT
2 Merrimac St.
Amesbury, MA
01913

PROJECT INFORMATION

OWNER INFORMATION

No.	Description	Date

PROJECT REVISIONS

Job No.:	2021–072
Date:	25 July 2024
Scale:	As Noted
Designed By:	MB
Drawn By:	SW
Checked By:	CM
Approved By:	JAS

Copyright © by Seger Architects, Inc. All rights reserved.

Site Plan Submission Landscape Details

SHEET NAME

L-8

SHEET NO.

SPJ LIGHTING Inc.
ARCHITECTURAL LANDSCAPE & OUTDOOR LIGHTING

SPECIFICATION SHEET

Contemporary Path Lights
SPJ-3124-DS

MODEL:	SPJ-3124-DS
MATERIAL:	Solid Brass
FINISH SHOWN:	Black
ELECTRICAL:	12V or 120V
WATTAGE:	2W
ENGINE:	FB-LS2
LUMENS:	150
MOUNTING:	1/2" NPT. Dual Fin Spike Included

FINISHES
- ☑ Matte Bronze (MBR)
- ☐ Verde (V)
- ☐ Moss (M)
- ☐ Black (B)
- ☐ Rusty (R)
- ☐ Satin Brass (SB)
- ☐ Aged Brass (AG)
- ☐ Raw Copper (RC)
- ☐ Natural Copper (NC)

PVD PREMIUM
- ☐ PVD Polished (PVDP)
- ☐ PVD Satin (PVDS)
- ☐ PVD Graphite (PVDG)
- ☐ PVD Bronze (PVDBZ)
- ☐ PVD Black (PVDBL))

WATTAGE	LUMENS
☐ 2W	150
☑ 4W	350

Custom lumen packages are available upon request

COLOR TEMPERATURE
- ☐ 2200K
- ☑ 2700K
- ☐ 3000K

Custom options are available

ELECTRICAL
☑ 12V ☐ 120V

MOUNTING OPTION
- ☑ Anchor bolted-DM6SQ
- ☐ Direct Burial-DB

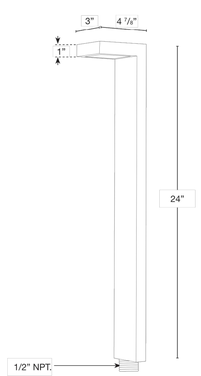

Deck Mount & Base Cover

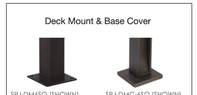

SPJ-DM6SQ (SHOWN)
SPJ-DMBSQ 8"
Deck Mount

SPJ-DMC-6SQ (SHOWN)
SPJ-DMC-8SQ 8 1/4"
Deck Cover

ANCHOR BOLT TO
6" Ø CONCRETE FOOTING

Wet Listed

Ordering Example	Customer Approval	Date
SPJ-3124-DS-B-2W-27K-12V		

Pathway Lighting Detail

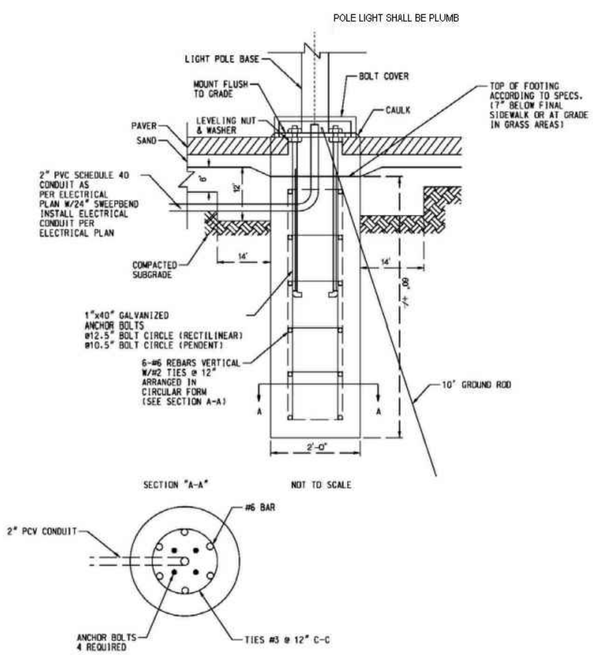

Light Pole Footing Detail

MOCK-UP THE INSTALLATION
- Use your sketch as a guide to establish your fence line by staking out the areas you wish to enclose.
- Mark each point where you will need an end, corner or gate post with a stake.
- Use the information in the below chart to mark line posts with a stake
- Attach string to each stake.

*When you need less than a full panel to complete the fence line, the panel can be cut down to fit. Notch the cut ends of the horizontal rails so they will seat inside of post.

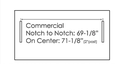

BEGINNING INSTALLATION

1) Attach a post cap to the first post using a rubber mallet
2) Mix concrete to set post. See the chart for hole and post depth
*The concrete footing must extend past the frost line in areas where freezing of the ground can cause the post to "heave"
3) Dig post holes approx. 6" diameter x appropriate depth per the chart. Fill the hole with approx. 6" of pea stone to allow for water drainage. Place the post in the hole and fill around with concrete mix, stopping approx. 2" from ground level.
* It's best to start the installation at a gate or corner
4) Make sure post level and plumb. Post may need to be braced while the concrete is setting

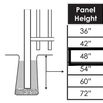

Panel Height	Post Height	Hole Depth	Post in Ground
36"	58"	27"	21"
42"	64"	27"	21"
48"	72"	27"	21"
54"	88"	33"	27"
60"	88"	33"	27"
72"	102"	35"	29"

Fence Section Installation
*** Installation should be done post-panel.**
*** Installing all post first is not recommended**

1) After the first post is installed and setting, begin installing the first fence section. Insert the horizontal rails from the section into the punched holes from the previously installed post. Place the rails into the post until the notch is against the face of the post.
*It is a good idea to have the next post hole in the run already dug and pea stone in the bottom when attaching the section to the previous post.
2) Place the next required post (line/corner/end) into the post hole, and slide the post onto the rails of the panel until the notch is against the face of the post. Fill the hole with concrete Mix, stopping approx. 2" from ground level.
3) Repeat by digging the next post hole and filling with pea stone. Insert the next fence section into the previously installed post. Place the next post into the post hole and slide the post onto the rails of the panel until the notch is against the face of the post. Fill the hole with concrete mix, stopping approx. 2" from ground level. Repeat down the line.
4) After every 3-4 fence sections are installed. Check to make sure all posts and sections are still level. Make corrections as needed, use a rubber mallet while the concrete is still somewhat soft.
5) After the concrete has set, fasten the fence section to the posts using screws provided. Be careful not to over-tighten screws because screw heads may break off or strip out. If using a power hex-head driver adjust the clutch to prevent the screws from marring the finish or denting the post.
6) Fill in the top of the post holes with dirt and grass so the fence will look like it's been there for years.
7) Touch up, using only the supplied touch up paint, any marks that may be visible.

iDeal aluminum fence gates railing

www.ideal-ap.com Toll Free: 877.323.6496 Fax: 877.226.4469

Perimeter Fence Detail

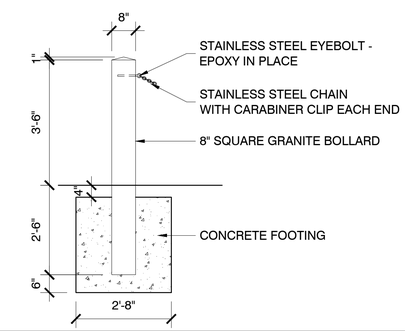

Granite Bollards with Chain
SCALE: $\frac{1}{2}$" = 1'-0"

2 RAIL CEDAR SPLIT RAIL

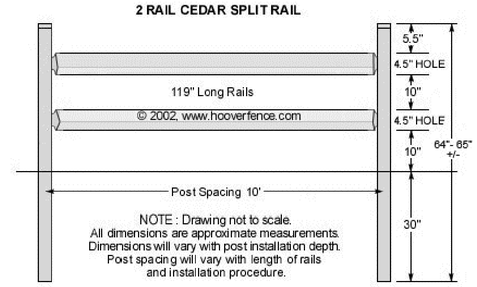

NOTE : Drawing not to scale.
All dimensions are approximate measurements.
Dimensions will vary with post installation depth.
Post spacing will vary with length of rails and installation procedure.

Split Rail Fence