LOCUS MAP
N.T.S.

PROPOSED SITE PLANS
OAK STREET LOFTS
AT OAKLAND STREET
IN
AMESBURY, MA
OCTOBER 2025

I CERTIFY:
THAT THIS PLAN CONFORMS
TO THE RULES AND REGULATIONS
OF THE REGISTER OF DEEDS.

DATE

FOR REGISTRY USE

AMESBURY PLANNING
BOARD APPROVAL

DATE

CITY OF AMESBURY
OFFICE OF THE CITY OF THE CLERK

THIS IS TO CERTIFY THAT ON _____
I RECEIVED FROM THE AMESBURY PLANNING BOARD CERTIFICATION OF ITS APPROVAL OF THIS PLAN AND THAT DURING THE (20) TWENTY DAYS NEXT FOLLOWING I HAVE RECEIVED NO NOTICE OF ANY APPEAL FROM SAID DECISION.

CLERK DATE

PLAN INDEX

SHEET NO.	TITLE
C-1.0	COVER SHEET
C-2.0	GENERAL NOTES & LEGEND
C-3.0	BOUNDARY PLAN
C-4.0	EXISTING CONDITIONS PLAN
C-5.0	CIVIL SITE PLAN
C-6.0	DEMOLITION & EROSION CONTROL PLAN
C-7.0, 7.1, & 7.2	CONSTRUCTION DETAILS
L-1	LANDSCAPE PLAN

PROJECT TEAM

OWNER:
9 OAKLAND STREET AMESBURY LLC
PO BOX 999
DANVILLE, NH 03819
978-815-1853

ATTORNEY:
LAW OFFICES OF
JEFFREY L. ROELOFS, PC
44 MERRIMAC STREET
NEWBURYPORT, MA 01950
978-462-7600

ARCHITECT:
SV DESIGN LLC
126 DODGE STREET
BEVERLY, MA 01915
978-529-2303

CIVIL ENGINEERING
SURVEY:
MILLENNIUM ENGINEERING, INC.
62 ELM STREET 01952
SALISBURY, MA
978-463-8980

LANDSCAPE ARCHITECT:
JAMES K. EMMANUEL ASSOCIATES
22 CARLTON ROAD
MARBLEHEAD, MA 01945
978-622-7487

NORTH

MEI

MILLENNIUM ENGINEERING, INC.
ENGINEERING AND LAND SURVEYING
62 ELM ST. SALISBURY, MA 01952
(978) 463-8980

OWNER:

9 OAKLAND STREET
AMESBURY LLC
PO BOX 999
DANVILLE NH 03819

PROJECT TEAM

9 OAKLAND ST
OAK STREET LOFTS
4-STORY BUILDING WITH GARAGE
9 OAKLAND STREET
AMESBURY, MA

PROJECT INFO

REV	DESCRIPTION	DATE
1.0	PEER REVIEW	3/30/2026

COMMONWEALTH OF MASSACHUSETTS
STEPHEN B. SAWYER
CIVIL
No. 52605
REGISTERED PROFESSIONAL ENGINEER

STAMP:

COVER SHEET

SHEET NAME:

SHEET: C1.0

SHT NO:

DR BY: SBS
CHK BY: AM
PROJ NO: M254459
DATE: SEPT. 23, 2025
SCALE: AS NOTED

E:\adskproj-2025\M254459\DWG\M254459-TITLE.dwg

LEGEND

EXISTING	PROPOSED	
□	■CB	CATCH BASIN (OR GUTTER INLET, OR LEACHING BASIN)
	■CBCI (OR GICI)	CATCH BASIN (OR GUTTER INLET) WITH CURB INLET
		CURB (OR BERM) – TYPE NOTED
		EDGE OF ROAD
— —109— —	—53—	CONTOUR
Ⓢ	Ⓢ	SEWER MANHOLE
Ⓓ	Ⓓ	DRAINAGE MANHOLE
GM		GAS GATE
WM	⋈	WATER GATE
		SEPTIC TANK
		HYDRANT
○ FA	● FA	FIRE ALARM BOX
		POST MOUNTED PEDESTRIAN LIGHT
		UTILITY POLE
—D—	—D—	DRAIN PIPE
—S—	—S—	SEWER MAIN
—S—		SEWER FORCE MAIN
—UE—	—UE—	UNDERGROUND ELECTRIC
—W—	—W—	WATER MAIN
□MB	■MB	MAIL BOX
		HIGHWAY GUARD (TYPE NOTED)
—x—x—	—x—x—	FENCE (SIZE AND TYPE NOTED)
		EASEMENT LINE
		PROPERTY LINE
		100 FT BUFFER ZONE
8 N00°00'00"E		BASE OR SURVEY LINE
+12.34	PC 8 N00°00'00"E +12.34	CONSTRUCTION BASELINE
		WHEELCHAIR RAMP (WCR)
		CONCRETE SIDEWALK
	TP26-2	TEST PIT
	—SF—	SILT SOCK
		WETLAND
		INFILTRATOR

SURVEY

120	WETLAND DELINEATION FLAG
C.B.	CONCRETE BOUND
S.B.	STONE BOUND
D.H.	DRILL HOLE
PK	MASONRY NAIL
I.P.	IRON PIPE
I ROD	IRON ROD
FND.	FOUND
N/FND.	NOT FOUND
0 / 00	ASSESSORS MAP AND PARCEL

GENERAL NOTES

1. THE CONTRACTOR SHALL REPORT TO THE OWNER AND ENGINEER ANY SIGNIFICANT VARIATIONS IN EXISTING SITE CONDITIONS. ANY PROPOSED REVISIONS TO THE WORK SHALL NOT BE UNDERTAKEN UNTIL REVIEWED AND APPROVED BY THE OWNER AND REGULATING CITY AND/OR STATE AGENCIES.

2. THE CONTRACTOR SHALL INSTALL ALL SYSTEM COMPONENTS IN ACCORDANCE WITH THE MANUFACTURER'S SPECIFICATIONS AND ALL APPLICABLE ELECTRICAL, PLUMBING, AND SANITARY CODES.

3. ALL WORK SHALL CONFORM TO; THE AMESBURY PLANNING BOARD RULES AND REGULATIONS GOVERNING THE SUBDIVISION OF LAND, AMESBURY CONSERVATION COMMISSION ORDER OF CONDITIONS, NPDES CONSTRUCTION GENERAL PERMIT; AND THESE PLANS.

4. THE LOCATION OF ALL UTILITIES, AS SHOWN ON THESE PLANS, ARE BASED UPON PLANS AND RECORD INFORMATION PROVIDED BY MUNICIPAL AND PRIVATE UTILITY COMPANIES AND ARE CONSIDERED APPROXIMATE BOTH AS TO SIZE AND LOCATION. NO WARRANTY IS MADE AS TO THE ACCURACY OF THESE LOCATIONS OR THAT ALL UTILITIES ARE SHOWN. THE CONTRACTOR SHALL NOT RELY ON THESE PLANS FOR SUCH INFORMATION AND WILL MAKE EXAMINATIONS IN THE FIELD BY VARIOUS AVAILABLE RECORDS, UTILITY COMPANIES AND INDIVIDUALS, AS TO THE LOCATION OF ALL SUBSURFACE STRUCTURES.

5. THE CONTRACTOR SHALL VERIFY THE LOCATION OF EXISTING UTILITIES BY CONTACTING "DIG-SAFE" AT LEAST 72 HOURS PRIOR TO ANY EXCAVATION. DIG-SAFE TELEPHONE NUMBER: 1-888-344-7233.

6. THE CONTRACTOR SHALL FIELD CHECK ALL DIMENSIONS AND ELEVATIONS BEFORE PROCEEDING WITH THE NEW WORK. HE/SHE SHALL EXCAVATE TO VERIFY PERTINENT DRAINAGE INVERTS AND POTENTIAL UTILITY CONFLICTS. ANY DISCREPANCIES SHALL BE REPORTED TO THE OWNER IMMEDIATELY.

7. ALL EXISTING STRUCTURES AND SURFACES, UNLESS OTHERWISE SHOWN, SHALL BE COMPLETELY REMOVED FROM THE AREAS OF WORK. ALL TREES SCHEDULED FOR REMOVAL SHALL BE FIELD MARKED AND APPROVED FOR REMOVAL BY THE OWNER PRIOR TO CUTTING OPERATIONS.

8. THE CONTRACTOR IS RESPONSIBLE FOR INITIATING, MAINTAINING AND SUPERVISING ALL SAFETY PRECAUTIONS AND PROGRAMS IN CONNECTION WITH THE WORK. THE CONTRACTOR SHALL TAKE ALL NECESSARY PRECAUTIONS FOR THE SAFETY OF THE PUBLIC, EMPLOYEES, AND ALL OTHER PERSONS ASSOCIATED WITH THE PROJECT. HE/SHE SHALL COORDINATE AND BE RESPONSIBLE FOR ALL SAFETY SIGNING, BARRIERS AND TEMPORARY PAVEMENT MARKINGS NECESSARY TO PROVIDE A SMOOTH AND PROPER TRANSITION FOR TRAFFIC FLOW.

9. IF REQUIRED BY THE CONTRACTOR, OVERHEAD LINES SHALL BE RELOCATED BY THE UTILITY COMPANY AT THE CONTRACTORS EXPENSE.

10. ALL SEWER MAINS AND SERVICES SHALL BE INSTALLED AT LEAST 10 FEET HORIZONTALLY OR 18 INCHES VERTICALLY FROM PROPOSED WATER MAINS AND SERVICES AND SHALL MAINTAIN 5 FEET OF COVER OVER THE TOP OF THE PIPING, UNLESS OTHERWISE SHOWN OR APPROVED. PIPES SHALL BE ENCASED IN CONCRETE WHERE THIS SEPARATION CANNOT BE OBTAINED.

11. ALL WATER MAINS SHALL BE INSTALLED WITH A MINIMUM OF 5 FEET OF COVER OVER THE TOP OF THE PIPE, UNLESS OTHERWISE SHOWN OR APPROVED.

12. WHENEVER SEWER MAINS MUST CROSS WATER MAINS, THE SEWER SHALL BE CONSTRUCTED AS FOLLOWS; A) JOINTS SHALL BE MECHANICAL TYPE WATER PRESSURE RATED WITH ZERO LEAKAGE WHEN TESTED AT 25 PSI FOR GRAVITY SEWERS AND 1.5 TIMES WORKING PRESSURE FOR FORCE MAINS AND JOINTS NOT TO BE LOCATED WITHIN 9 FEET OF THE CROSSING; B) SEWER SERVICES SHOULD BE INSTALLED A MINIMUM OF 18 INCHES BELOW WATER MAINS. IF SEPARATION IS LESS THAN 18 INCHES, SEWER SERVICE SHALL BE CONCRETE ENCASED OR CONSTRUCTED WITH PRESSURE CLASS PVC FOR A DISTANCE OF 10 FEET EACH SIDE OF THE WATER MAIN. 10-FOOT MINIMUM HORIZONTAL SEPARATION DISTANCE SHALL BE MAINTAINED.

13. INDIVIDUAL BUILDING OWNERS ARE RESPONSIBLE FOR MAINTENANCE OF THEIR SEWER SERVICE FROM THE BUILDING TO THE CONNECTION AT THE SEWER MAIN.

14. ALL STREET, WARNING, AND REGULATORY SIGNS SHALL BE IN CONFORMANCE WITH THE MASSACHUSETTS DEPARTMENT OF TRANSPORTATION MANUAL OF UNIFORM TRAFFIC CONTROL DEVICES AND STANDARD SPECIFICATIONS AND LATEST ADDENDA.

15. NO CONSTRUCTION SHALL TAKE PLACE UNTIL THE OWNER/DEVELOPER HAS RECEIVED WRITTEN APPROVAL OF THIS PLAN FROM THE CITY.

16. 14 DAYS PRIOR TO COMMENCING CONSTRUCTION, THE OWNER/DEVELOPER SHALL PRESENT A CONSTRUCTION SCHEDULE TO THE CITY.

17. TWO HARD COPIES OF AS-BUILT DRAWINGS SHALL BE SUBMITTED TO THE CITY UPON COMPLETION OF THE PROJECT. ONE SOFT COPY OF THE AS-BUILT DRAWINGS SHALL BE PROVIDED TO THE TOWN WITHIN 30 CALENDAR DAYS OF RECEIVING ANY OCCUPANCY PERMIT FROM THE TOWN. SOFT COPIES SHALL BE PROVIDED ON A CD. AS-BUILTS SHALL INCLUDE ALL LANDSCAPE AND UTILITIES INFORMATION. ANY AND ALL CHANGES FROM THE PREVIOUSLY APPROVED PLANS AND SPECIFICATIONS SHOULD BE HIGHLIGHTED FOR EASE OF REVIEW.

18. COMPETENT SUPERVISION SHALL BE PROVIDED BY THE CONTRACTOR DURING CONSTRUCTION ACTIVITIES.

19. ONSITE BURIAL OF STUMPS OR ANY OTHER DEBRIS IS PROHIBITED.

20. THE PROPERTY DOES NOT LIE WITHIN THE 100-YEAR FLOOD PLAIN ACCORDING TO FEMA AND IT DOES NOT LIE WITHIN A ZONE II WELLHEAD PROTECTION AREA.

21. ALL ELEVATIONS ARE BASED ON N.A.V.D. 1988.

MATERIAL NOTES

ALL MATERIALS OF THE ELEMENTS IN THE SITE PLAN MUST CONFORM TO THE FOLLOWING STANDARDS:

- SPECIFICATIONS BY THE CITY OF AMESBURY AS SET FORTH IN THE RULES AND REGULATIONS GOVERNING THE SUBDIVISION OF LAND
- COMMONWEALTH OF MASSACHUSETTS DEPARTMENT OF TRANSPORTATION STANDARD SPECIFICATIONS FOR HIGHWAYS AND BRIDGES
- AMERICAN SOCIETY FOR TESTING AND MATERIALS (ASTM)
- AMERICAN WATER WORKS ASSOCIATION (AWWA)
- 521 CMR RULES AND REGULATIONS OF THE ARCHITECTURAL ACCESS BOARD (AAB) AND THE AMERICANS WITH DISABILITIES ACT (ADA)

PAVING NOTES

1.) ALL STUMPS, ROCKS AND LEDGE WITHIN THE LIMITS OF THE PROPOSED PAVED WAY SHALL BE REMOVED. ALL LEDGE SHALL BE REMOVED TO A MINIMUM DEPTH OF 2' BELOW FINISHED PAVEMENT GRADE.

2.) ROADWAY SHALL NOT BE CONSTRUCTED DURING FREEZING WEATHER OR ON WET OR FROZEN SUBGRADE.

3.) GRADING AND ROLLING SHALL BE REQUIRED TO PROVIDE A SMOOTH, EVEN, AND UNIFORM COMPACTED BASE WHICH IS COMPACTED TO A MINIMUM DRY DENSITY OF 95 PERCENT.

4.) THE MINIMUM SLOPE FROM THE CROWN OF FINISHED BASE COURSE SHALL BE 1/4"PER FOOT UNLESS OTHERWISE SHOWN.

5.) ALL UNSUITABLE MATERIAL SHALL BE EXCAVATED AND REPLACED WITH SATISFACTORY MATERIAL AND BROUGHT UP TO GRADE WITH GRAVEL BORROW CONTAINING NO STONES GREATER THAN 6" DIAMETER.

6.) AT ALL TIMES DURING CONSTRUCTION, THE SUB-GRADE AND ALL DITCHES SHALL BE CONSTRUCTED AND MAINTAINED SO THAT THE ROADWAY WILL EFFECTIVELY BE DRAINED.

SIDEWALK NOTES

SIDEWALKS SHALL BE FIVE FEET IN WIDTH FOR THEIR ENTIRE LENGTH, WITH A 1% CROSS SLOPE (1.5% MAX).

SIDEWALKS SHALL BE CONSTRUCTED WITH A 1.5" TYPE I-1 BITUMINOUS CONCRETE FINISH COURSE, A 1.5" TYPE I-1 BITUMINOUS CONCRETE BINDER COURSE OVER A 12" GRAVEL BASE (MDOT M1.03.0 TYPE C).

WHERE SIDEWALKS TRAVERSE A DRIVEWAY, THE GRAVEL BASE SHALL BE 12" THICK.

I CERTIFY:
THAT THIS PLAN CONFORMS
TO THE RULES AND REGULATIONS
OF THE REGISTER OF DEEDS.

_____ DATE

FOR REGISTRY USE

AMESBURY PLANNING BOARD APPROVAL

_____

_____

_____

_____

_____

_____

_____ DATE

CITY OF AMESBURY
OFFICE OF THE CITY OF THE CLERK

THIS IS TO CERTIFY THAT ON _____ I RECEIVED FROM THE AMESBURY PLANNING BOARD CERTIFICATION OF ITS APPROVAL OF THIS PLAN AND THAT DURING THE (20) TWENTY DAYS NEXT FOLLOWING I HAVE RECEIVED NO NOTICE OF ANY APPEAL FROM SAID DECISION.

_____
CLERK DATE

NORTH

MEI
MILLENNIUM ENGINEERING, INC.
ENGINEERING AND LAND SURVEYING
62 ELM ST. SALISBURY, MA 01952
(978) 463-8980

OWNER:

9 OAKLAND STREET
AMESBURY LLC
PO BOX 999
DANVILLE NH 03819

PROJECT TEAM

9 OAKLAND ST
OAK STREET LOFTS
4-STORY BUILDING WITH GARAGE
9 OAKLAND STREET
AMESBURY, MA

PROJECT INFO

REV	DESCRIPTION	DATE
1.0	PEER REVIEW	3/30/2026

COMMONWEALTH OF MASSACHUSETTS
STEPHEN B. SAWYER
CIVIL
No. 20005
REGISTERED PROFESSIONAL ENGINEER

STAMP:

LEGEND/ GENERAL NOTES

SHEET NAME:

SHEET: C2.0

SHT NO:

DR BY: SBS
CHK BY: AM
PROJ NO: M254459
DATE: SEPT. 23, 2025
SCALE: AS NOTED

E:\adskproj-2025\M254459\DWG\M254459-TITLE.dwg

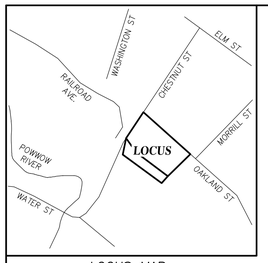

LOCUS MAP
N.T.S.

ASSESSOR REFERENCE

CITY OF AMESBURY ASSESSOR
MAP 53 LOTS 94 & 95

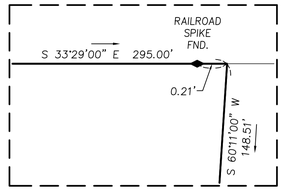

DETAIL A.
(NOT TO SCALE)

FOR REGISTRY USE

I CERTIFY THAT THIS PLAN CONFORMS TO THE RULES AND REGULATIONS OF THE REGISTER OF DEEDS.

MICHAEL J. SERGI — 9/23/2025 DATE

OAKLAND STREET

(PUBLIC ~ WIDTH VARIES)

OWNER OF RECORD

9 OAKLAND STREET AMESBURY, LLC

DEED REFERENCES

1. SEE DEED FROM ROGER D. MATTHEWS AS PERSONAL REPRESENTATIVE OF THE ESTATE OF SALLY P. ISRAEL TO 9 OAKLAND STREET AMESBURY, LLC. DATED 4/13/2015 AND RECORDED AT THE SOUTH ESSEX REGISTRY OF DEEDS BOOK 33983 PAGE 110.
2. REGISTERED LAND CERTIFICATE No. 88344

KEY PLAN REFERENCES

1. LAND COURT 30403A
2. PLAN OF LAND IN AMESBURY, MA DRAWN BY PORT ENGINEERING ASSOCIATES, INC, DATED DEC 2, 1986 AND RECORDED AT THE SOUTH ESSEX REGISTRY OF DEEDS PLAN BOOK 219 PLAN 79.
3. PLAN OF LAND IN AMESBURY, MA DRAWN BY PORT ENGINEERING ASSOCIATES, INC, DATED AUG 17, 1987 AND RECORDED AT THE SOUTH ESSEX REGISTRY OF DEEDS PLAN BOOK 244 PLAN 100.

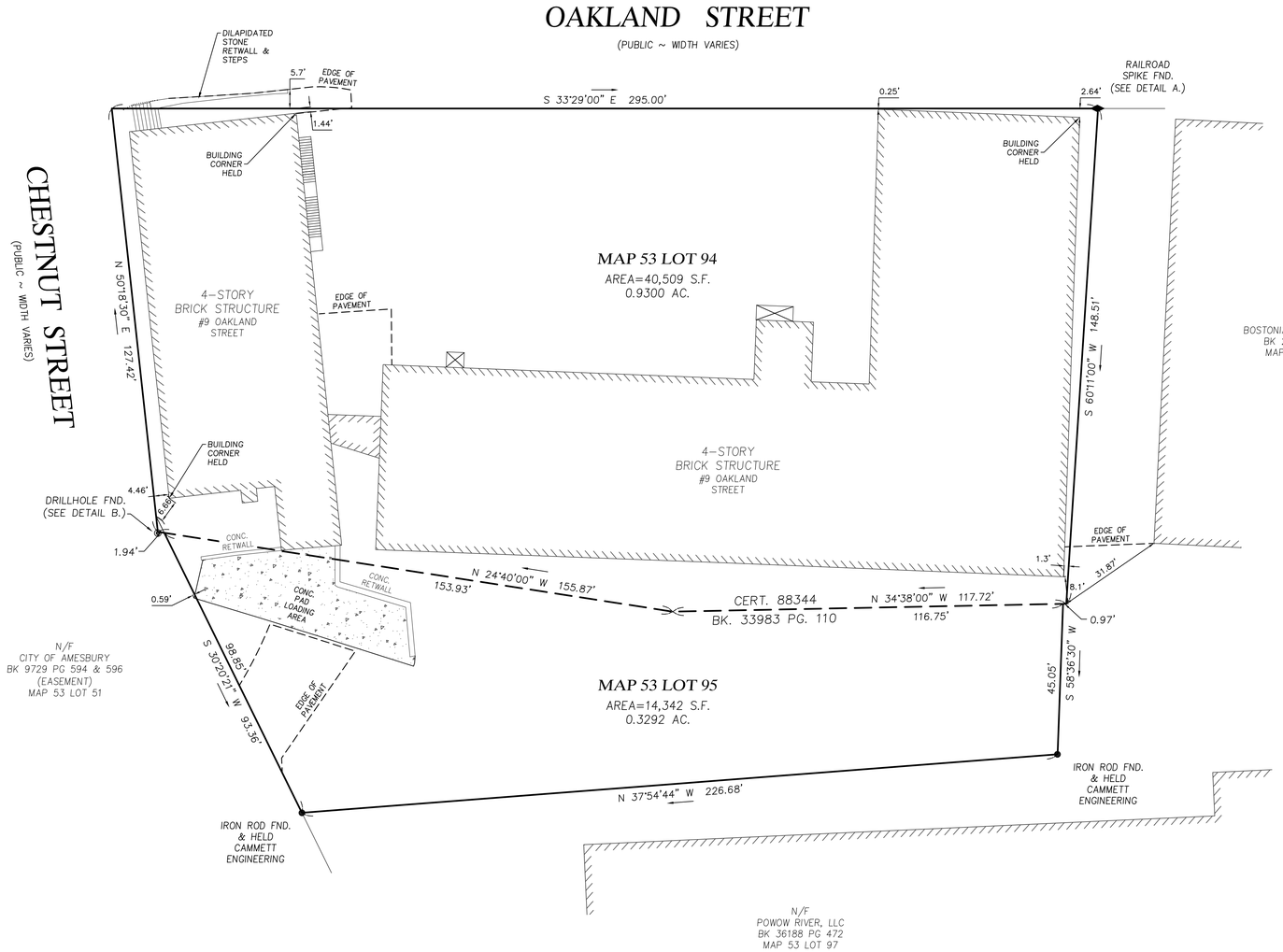

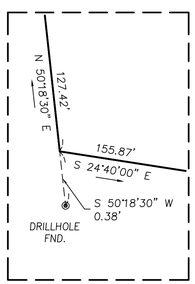

DETAIL B.
(NOT TO SCALE)

NOTES

1. ORIENTATION IS TO MASS MAINLAND SPC NAD 1983 BASED ON MULTIPLE GNSS RTK OBSERVATIONS.
2. STATUS OF RIGHT OF WAYS SHOWN AS PUBLIC OR PRIVATE ARE BASED ON REFERENCED DEEDS AND PLANS. NO WARRANTY IS EXPRESSED OR IMPLIED.
3. THIS SURVEY IS NOT A CERTIFICATION TO OWNERSHIP OR TITLE OF LANDS SHOWN. OWNERSHIP AND ENCUMBRANCES ARE MATTERS OF TITLE EXAMINATION NOT OF A BOUNDARY SURVEY. THE INTENT OF THIS PLAN IS TO ESTABLISH THE BOUNDARY LINES OF DEEDS REFERENCED HEREON. OWNERSHIP OF ADJOINING PROPERTIES IS ACCORDING TO ASSESSOR'S RECORDS. THIS PLAN MAY OR MAY NOT INDICATE ALL ENCUMBRANCES WHETHER EXPRESSED, IMPLIED OR PRESCRIPTIVE.

I CERTIFY THAT THE PROPERTY LINES SHOWN ARE THE LINES DIVIDING EXISTING OWNERSHIPS, AND THE LINES OF STREETS AND WAYS SHOWN ARE THOSE OF PUBLIC OR PRIVATE STREETS OR WAYS ALREADY ESTABLISHED, AND NO NEW LINES FOR DIVISION OF EXISTING OWNERSHIPS OR FOR NEW WAYS ARE SHOWN.

CHAPTER 41 SECTION 81X

MICHAEL J. SERGI P.L.S. — 9/23/2025 DATE

THE CERTIFICATION SHOWN ABOVE IS INTENDED TO MEET REGISTRATION REQUIREMENTS AND IS NOT A CERTIFICATION TO TITLE OR OWNERSHIP OF PROPERTY SHOWN.OWNERSHIP OF ADJOINING PROPERTIES ARE ACCORDING TO ASSESSORS RECORDS.

GRAPHIC SCALE
0 20 10 0 20 60
(IN FEET)
1 inch = 20'

PREPARED FOR

9 OAKLAND STREET AMESBURY, LLC
11353 REED HARTMAN HWY, SUITE 300
CINCINNATI, OH 45241

NO.	DATE	DESCRIPTION	BY
1.	3/10/2026	PEER REVIEW	SBS

MEI
MILLENNIUM ENGINEERING, INC.
ENGINEERING AND LAND SURVEYING
62 ELM ST. SALISBURY, MA 01952 (978) 463-8980
13 HAMPTON RD. EXETER, NH 03833 (603) 778-0528

SCALE: 1"=20' | CALC. BY: A.W.M.
DATE: SEPT 23, 2025 | CHKD. BY: M.J.S. | PROJECT: M254459

PLAN OF LAND
IN
AMESBURY, MA
SHOWING
EXISTING CONDITIONS
AT
9 OAKLAND STREET

BOUNDARY PLAN

SHEET: C3.0

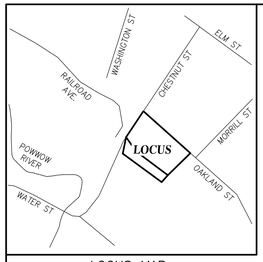

LOCUS MAP
N.T.S.

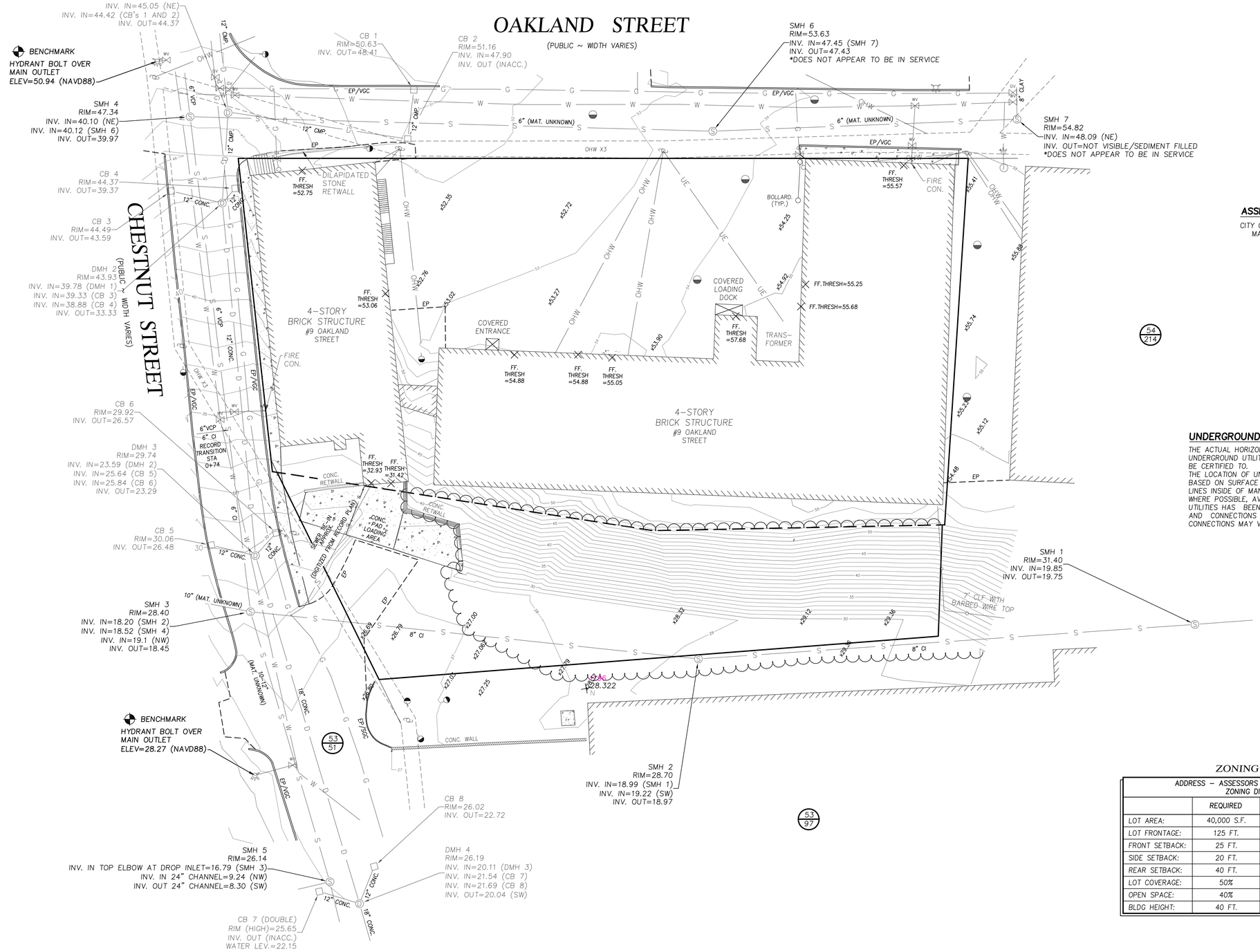

OWNER OF RECORD

9 OAKLAND STREET AMESBURY, LLC

DEED REFERENCES

1. SEE DEED FROM ROGER D. MATTHEWS AS PERSONAL REPRESENTATIVE OF THE ESTATE OF SALLY P. ISRAEL TO 9 OAKLAND STREET AMESBURY, LLC. DATED 4/13/2015 AND RECORDED AT THE SOUTH ESSEX REGISTRY OF DEEDS BOOK 33983 PAGE 110.
2. SEE LAND COURT CERTIFICATE No. 88344 DATED 4/15/2015 AND ON FILE AT THE SOUTH ESSEX REGISTRY OF DEEDS.

FLOOD NOTE:

THE TWO PROPERTIES COMPRISING 9 OAKLAND STREET ARE NOT LOCATED WITHIN A FLOOD HAZARD AREA AS SHOWN ON FEMA F.I.R.M. 25009C0106F, EFFECTIVE 7/3/2012.

ASSESSOR REFERENCE

CITY OF AMESBURY ASSESSOR
MAP 53 LOTS 94 & 95

UNDERGROUND UTILITY NOTE

THE ACTUAL HORIZONTAL AND VERTICAL LOCATION OF UNDERGROUND UTILITY LINES BETWEEN STRUCTURES CANNOT BE CERTIFIED TO.
THE LOCATION OF UNDERGROUND UTILITIES SHOWN ARE BASED ON SURFACE FEATURES, OBSERVATION OF EXISTING LINES INSIDE OF MANHOLES AND CLIENT RECORDS.
WHERE POSSIBLE, AVAILABLE RECORD INFORMATION FOR UTILITIES HAS BEEN USED TO VERIFY THE FIELD LOCATIONS AND CONNECTIONS SHOWN.THE ACTUAL LOCATION AND CONNECTIONS MAY VARY FROM THAT SHOWN HEREON.

LEGEND

D.H.	DRILL HOLE
I ROD	IRON ROD
FND.	FOUND
N/F	NOW OR FORMERLY
D	DRAINAGE
W	WATER
S	SEWER
G	GAS
OHW	OVERHEAD WIRE
UGT	UNDERGROUND TELEPHONE
UE	UNDERGROUND ELECTRIC
	BENCHMARK
CB	CATCH BASIN
DMH	DRAIN MANHOLE
SMH	SEWER MANHOLE
X	SPOT GRADE
	UTILITY POLE
	GUY
	MONITORING WELL
	HYDRANT
	GAS VALVE
	GAS SHUT OFF
	WATER SHUT OFF
	WATER VALVE
0 / 00	ASSESSORS MAP# PARCEL#

ZONING TABLE

ADDRESS – ASSESSORS MAP 53 LOTS 94 & 95
ZONING DISTRICT IC

	REQUIRED	EXISTING	PROPOSED
LOT AREA:	40,000 S.F.	**	**
LOT FRONTAGE:	125 FT.	**	**
FRONT SETBACK:	25 FT.	**	**
SIDE SETBACK:	20 FT.	**	**
REAR SETBACK:	40 FT.	**	**
LOT COVERAGE:	50%	**	**
OPEN SPACE:	40%	**	**
BLDG HEIGHT:	40 FT.	**	**

GRAPHIC SCALE
0 20 10 0 20 60
(IN FEET)
1 inch = 20'

PREPARED FOR

9 OAKLAND STREET AMESBURY, LLC
11353 REED HARTMAN HWY, SUITE 300
CINCINNATI, OH 45241

NO.	DATE	DESCRIPTION	BY
1.	3/10/2026	PEER REVIEW, ADD 1 CONTOURS & SPOT GRADES	SBS

MILLENNIUM ENGINEERING, INC.
ENGINEERING AND LAND SURVEYING
62 ELM ST. SALISBURY, MA 01952 (978) 463-8980
13 HAMPTON RD. EXETER, NH 03833 (603) 778-0528

SCALE: 1"=20' | CALC. BY: A.W.M.
DATE: SEPT 23, 2025 | CHKD. BY: M.J.S.
PROJECT: M254459

SITE PLAN
IN
AMESBURY, MA

SHOWING
EXISTING CONDITIONS
AT
9 OAKLAND STREET

EXISTING CONDITIONS

SHEET: C4.0

ZONING

CENTRAL INDUSTRIAL (IC) &
LOWER MILLYARD OVERLAY DISTRICT (LMOD)

	(CI) REQUIRED	(LMOD) REQUIRED	EXISTING	PROPOSED
MINIMUM LOT AREA	40,000 SQUARE FEET	5,000 SQUARE FEET	54,890 SQUARE FEET	54,890 SQUARE FEET
MINIMUM FRONTAGE	125 FEET	60 FEET	516 FEET	516 FEET
FRONT SETBACK	25 FEET	0 FEET	0.1 FEET	0.1 FEET
SIDE SETBACK	20 FEET	0 FEET	1.3 FEET	1.3 FEET
REAR SETBACK	40 FEET	0 FEET	53.2 FEET	3.4 FEET
MAX. BLDG. AREA (%)	50%	–	41.5% (22,771 S.F.)	68.7% (37,707 S.F.)
MAX. COVERAGE AREA(%)	–	50%	67% (36,753 S.F.)	87% (47,665 S.F.)
MIN OPEN SPACE (%)	40%	50%	33% (18,137 S.F.)	13% (7,225 S.F.)
MAXIMUM HEIGHT	40 FEET	40 FEET	53 FEET	56 FEET

*BUILDING OWNER TO PROVIDE EASEMENT TO THE CITY OF AMESBURY AND AGREE TO MAINTAIN THE SEWER PIPE WITHIN THE PROPERTY LIMITS IN PERPETUITY.

**ALL BUILDING ROOF DRAINS TO BE DIRECTED TO THE DETENTION CHAMBER. THE BUILDING PERMIT PLUMING PLANS TO BE PROVIDED TO THE ENGINEER AND AMESBURY COMMUNITY DEVELOPMENT.

***BUILDING SEWER SERVICE TO BE DIRECTED TO THE REPLACED SEWER UNDER GARAGE SLAB. THE BUILDING PERMIT PLUMING PLANS TO BE PROVIDED TO THE ENGINEER AND AMESBURY COMMUNITY DEVELOPMENT.

I CERTIFY:
THAT THIS PLAN CONFORMS
TO THE RULES AND REGULATIONS
OF THE REGISTER OF DEEDS.

DATE

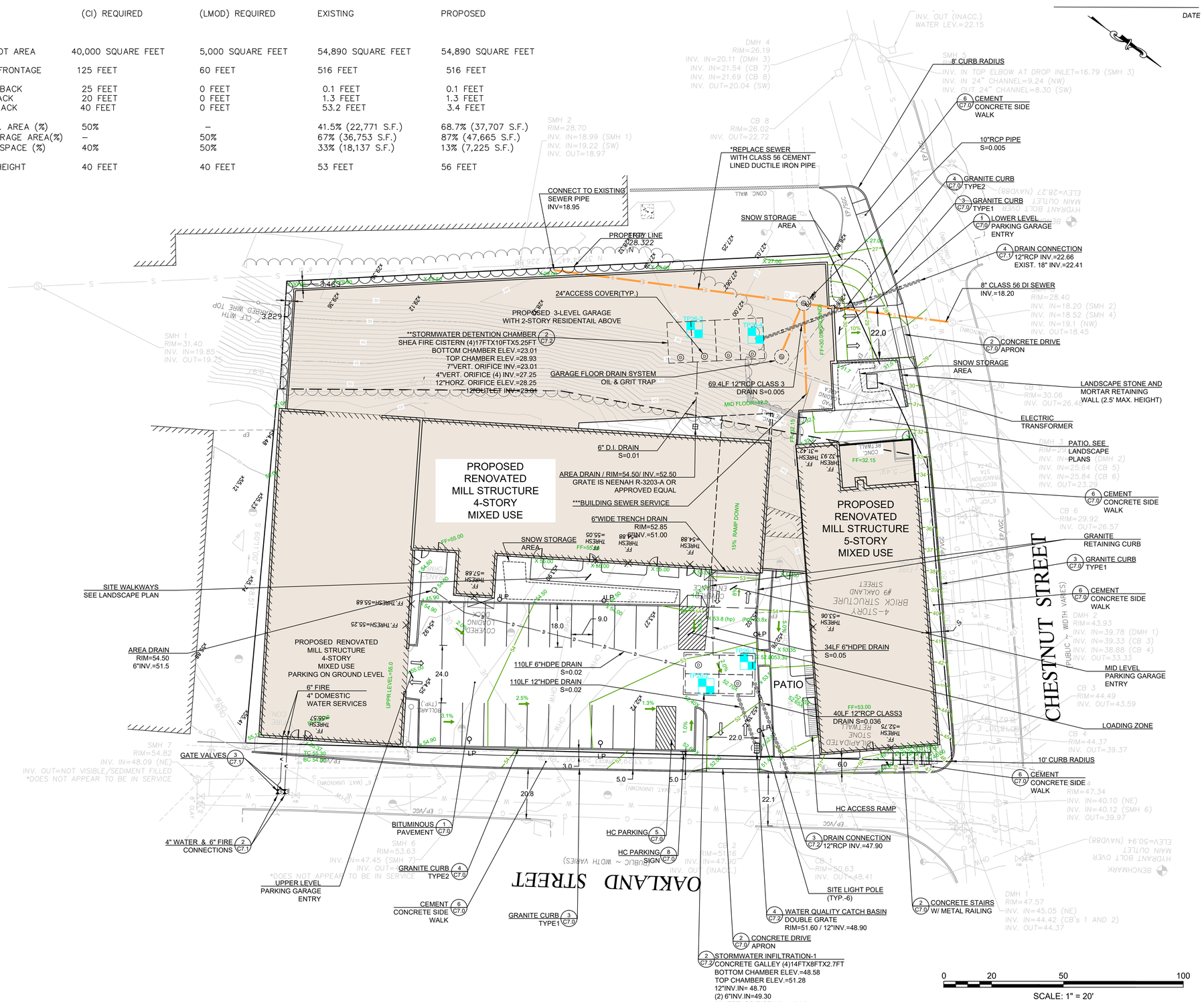

FOR REGISTRY USE

AMESBURY PLANNING BOARD APPROVAL

DATE

CITY OF AMESBURY
OFFICE OF THE CITY OF THE CLERK

THIS IS TO CERTIFY THAT ON _____
I RECEIVED FROM THE AMESBURY PLANNING BOARD CERTIFICATION OF ITS APPROVAL OF THIS PLAN AND THAT DURING THE (20) TWENTY DAYS NEXT FOLLOWING I HAVE RECEIVED NO NOTICE OF ANY APPEAL FROM SAID DECISION.

CLERK DATE

NORTH

MEI
MILLENNIUM ENGINEERING, INC.
ENGINEERING AND LAND SURVEYING
62 ELM ST. SALISBURY, MA 01952
(978) 463-8980

OWNER:

9 OAKLAND STREET
AMESBURY LLC
PO BOX 999
DANVILLE NH 03819

PROJECT TEAM

9 OAKLAND ST
OAK STREET LOFTS
4-STORY BUILDING WITH GARAGE
9 OAKLAND STREET
AMESBURY, MA

PROJECT INFO

REV	DESCRIPTION	DATE
1.0	PEER REVIEW RESP.	3/27/26

STAMP:

CIVIL SITE PLAN

SHEET NAME:

C5.0

SHT NO:

DR BY: SS
CHK BY: AM
PROJ NO: M254459
DATE: SEPT. 23, 2025
SCALE: 1"=20'

E:\sdskproj-2025\M254459\DWG\M254459-D rev3-Cisterns.dwg

PROJECT NAME AND LOCATION

9 OAKLAND STREET
AMESBURY, MA

RESPONSIBLE PARTY

9 OAKLAND STREET AMESBURY, LLC
SWEET MANAGEMENT , CURT SWEET
978-815-1853

DESCRIPTION

THE PROJECT CONSISTS OF THE REDEVELOPMENT OF THE PROPERTY INCLUDING THE REOVATION OF A LARGE INDUSTRIAL MILL BUILDING AND NEW PARKING STRUCTURE WITH SUPPORTING SITE WORK, UTILITIES AND DRAINAGE. THE CONTRACTOR SHALL BE RESPONSIBLE FOR ALL EROSION CONTROL AND INSPECTIONS DURING THE CONSTRUCTION PERIOD.

SOIL CHARACTERISTICS

THE EXISTING SITE IS PRESENTLY DEVELOPED. THE UNDERLYING SOILS CONSIST LARGELY OF A FINE SANDY LOAM WITH SAND ALONG THE SOUTHERN SIDE OF THE SITE.

DISTURBED AREA

THE TOTAL LAND AREA TO BE DISTURBED IS APPROXIMATELY 33,700 S.F.

SEQUENCE OF MAJOR ACTIVITIES

1. INSTALL EROSION CONTROLS. DEMO PAVEMENTS, CLEAR AND GRUB SITE.
2. INSTALL NEW GARAGE FOOTINGS AND WALLS
3. CONSTRUCT DRAINAGE CHAMBERS AND WALL SYSTEMS.
4. CONSTRUCT UTILTIES DRIANAGE AND SITE WORKS.
5. CONSTRUCT NEW RESISDENIAL BUILDINGS.
6. FINAL PAVING AND LANSCAPING.

EROSION AND SEDIMENT CONTROLS AND STABILIZATION PRACTICES

STABILIZATION SHALL BE INITIATED ON ALL LOAM STOCKPILES AND DISTURBED AREAS WHERE CONSTRUCTION ACTIVITY WILL NOT OCCUR FOR MORE THAN THIRTY (30) CALENDAR DAYS BY THE FOURTEENTH (14th) DAY AFTER CONSTRUCTION ACTIVITY HAS PERMANENTLY OR TEMPORARILY CEASED IN THAT AREA. ALL DISTURBED AREAS SHALL BE STABILIZED WITHIN 60 DAYS OF INITIAL DISTURBANCE. ALL CUT AND FILL SLOPES SHALL BE STABILIZED WITHIN 72 HOURS OF ACHIEVING GRADE. STABILIZATION MEASURES TO BE USED INCLUDE:

A. TEMPORARY SEEDING.
B. MULCHING.
C. STONE RIP RAP.
D. JUTE MATTING.

INSTALLATION, MAINTENANCE AND INSPECTION PROCEDURES OF EROSION AND SEDIMENT CONTROLS

A. GENERAL

INSPECTION

1. ALL CONTROL MEASURES WILL BE INSPECTED AT LEAST ONCE EACH WEEK AND FOLLOWING ANY STORM EVENT OF 0.5 INCHES OR GREATER.

2. A MAINTENANCE INSPECTION REPORT WILL BE MADE AFTER EACH INSPECTION.

3. THE CONTRACTOR'S SITE SUPERINTENDENT WILL BE RESPONSIBLE FOR INSPECTIONS, MAINTENANCE AND REPAIR ACTIVITIES, AND FILLING OUT THE INSPECTION AND MAINTENANCE REPORT.

MAINTENANCE

1. ALL MEASURES WILL BE MAINTAINED IN GOOD WORKING ORDER; IF A REPAIR IS NECESSARY, IT WILL BE INITIATED WITHIN 24 HOURS OF REPORT.

2. BUILT UP SEDIMENT WILL BE REMOVED FROM SILT SOCK BARRIERS WHEN IT HAS REACHED ONE THIRD THE HEIGHT OF THE FENCE OR BALE.

B. FILTERS

DISTURBED CONTRIBUTING AREA SHOULD NOT EXCEED 0.25 ACRES PER 100 LINEAR FEET OF FILTER BARRIER.

1. SILT SOCK
 A. SHEET FLOW APPLICATIONS
  1. SOCK SHALL BE PLACED IN A SINGLE ROW, LENGTHWISE ON THE CONTOUR, OVELAP JOINTS BY 2 FEET.
  2. SOCK SHALL BE SECURELY ANCHORED BY AT LEAST ONE STAKE FOR EACH 3 LINEAR FEET OF SOCK DRIVEN THROUGH THE CENTER POINT OF THE SOCK.

2. PHASING AND SEQUENCE OF INSTALLATION FOR PROTECTION OF THE INFILTRATION CHAMBERS

SEDIMENT BARRIERS SHALL BE INSTALLED PRIOR TO ANY SOIL DISTURBANCE OF THE CONTRIBUTING DRAINAGE AREA ABOVE THEM.

THIS PROJECT AND ITS EROSION CONTROL STRUCTURES WILL BE PHASED IN THE FOLLOWING IN THE FOLLOWING MANNER:

PHASE 1:
- ALL WATER TO BE DIRECTED TO STONE SUMP. ANY WATER RUNOFF TO BE DIRECTED TO INFILTRATION GALLEY AND CATCH BASIN IS PROHIBITED.

PHASE 2:
- CATCH BASIN TO BE PROTECTED WITH DOUBLE ROW HAY BALES AND SILT SOCK
- SILT SOCK AND HAY BALES TO BE INSPECTED DAILY. ANY SEDIMENT ACCUMULATION TO
- BE SWEPT AND REMOVED.
- SILT SACK TO BE REPLACED WHEN ITS FILLED TO 25% CAPACITY WITH SEDIMENT

3. MAINTENANCE
 A. SILT SOCK AND SILT FENCE BARRIERS SHALL BE INSPECTED IMMEDIATELY AFTER EACH RAINFALL AND AT LEAST DAILY DURING PROLONGED RAINFALL. THEY SHALL BE REPAIRED IF THERE ARE ANY SIGNS OF EROSION OR SEDIMENTATION BELOW THEM. ANY REQUIRED REPAIRS SHALL BE MADE IMMEDIATELY. IF THERE ARE SIGNS OF UNDERCUTTING AT THE CENTER OR THE EDGES, OR IMPOUNDING OF LARGE VOLUMES OF WATER BEHIND THEM, SEDIMENT BARRIERS SHALL BE REPLACED WITH A TEMPORARY CHECK DAM.
 B. SHOULD THE FABRIC ON A SILT FENCE OR FILTER BARRIER DECOMPOSE OR BECOME INEFFECTIVE PRIOR TO THE END OF THE EXPECTED USABLE LIFE AND THE BARRIER STILL IS NECESSARY, THE FABRIC SHALL BE REPLACED PROMPTLY.
 C. SEDIMENT DEPOSITS SHOULD BE REMOVED AFTER EACH STORM EVENT. THEY MUST BE REMOVED WHEN DEPOSITS REACH APPROXIMATELY ONE THIRD (1/3) THE HEIGHT OF THE BARRIER.
 D. ANY SEDIMENT DEPOSITS REMAINING IN PLACE AFTER THE SILT FENCE OR FILTER BARRIER IS NO LONGER REQUIRED SHALL BE DRESSED TO CONFORM WITH THE EXISTING GRADE, PREPARED AND SEEDED.

WASTE DISPOSAL

A. WASTE MATERIALS

ALL WASTE MATERIALS WILL BE COLLECTED AND STORED IN SECURELY LIDDED RECEPTACLES. ALL TRASH AND CONSTRUCTION DEBRIS FROM THE SITE WILL BE DEPOSITED IN A DUMPSTER. NO CONSTRUCTION WASTE MATERIALS WILL BE BURIED ON SITE. ALL PERSONNEL WILL BE INSTRUCTED REGARDING THE CORRECT PROCEDURE FOR WASTE DISPOSAL BY THE SUPERINTENDENT.

B. HAZARDOUS WASTE

ALL HAZARDOUS WASTE MATERIALS WILL BE DISPOSED OF IN THE MANNER SPECIFIED BY LOCAL OR STATE REGULATION OR BY THE MANUFACTURER. SITE PERSONNEL WILL BE INSTRUCTED IN THESE PRACTICES BY THE SUPERINTENDENT.

C. SANITARY WASTE

ALL SANITARY WASTE WILL BE COLLECTED FROM THE PORTABLE UNITS A MINIMUM OF ONCE PER WEEK BY A LICENSED SANITARY WASTE MANAGEMENT CONTRACTOR.

DUST CONTROL

A. THE CONTRACTOR SHALL BE RESPONSIBLE TO CONTROL DUST THROUGHOUT THE CONSTRUCTION PERIOD. DUST CONTROL METHODS SHALL INCLUDE, BUT NOT LIMITED TO SPRINKLING WATER ON EXPOSED AREAS, COVERING LOADED DUMP TRUCKS LEAVING THE SITE, AND TEMPORARY MULCHING. DUST CONTROL MEASURES SHALL BE UTILIZED SO AS TO PREVENT THE MIGRATION OF DUST FROM THE SITE TO ABUTTING AREAS.

ADDITIONAL NOTES FOR DRAINAGE INFILTRATION SYSTEMS

THE CONTRACTOR SHALL INSURE NO SEDIMENT ENTERS THE INFILTRATION BASINS DURING CONSTRUCTION. ADDITIONALLY NO SEDIMENT SHALL BE ALLOWED INTO THE DRAINAGE SYSTEM UPON COMPLETION OF THE SYSTEM. ALL SILTATION BARRIERS SHALL BE INSPECTED DAILY AND CLEANED AND MAINTAINED. SILTSACKS SHOULD BE REPLACED BI-WEEKLY OF AFTER ANY STORM EVENT IN EXCESS OF 0.5 INCHES. WATER QUALITY UNITS SHALL BE INSPECTED DAILY AND UNITS SHALL BE CLEANED IF ANY EVIDENCE OF SEDIMENT.

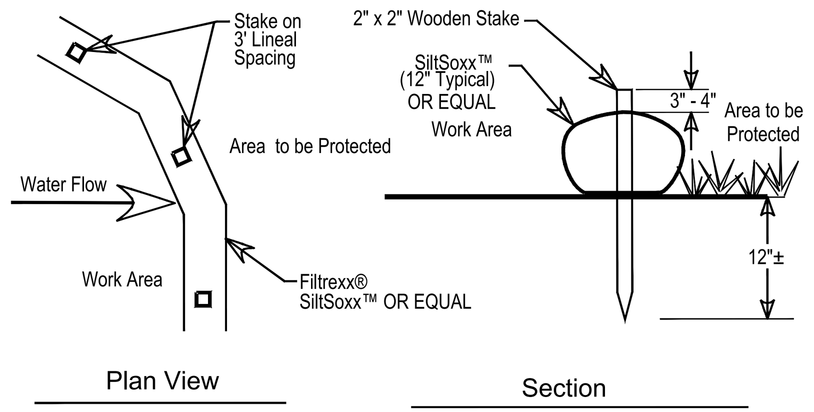

Notes:
1. All material to meet Filtrexx® specifications OR EQUAL
2. Compost material to be dispersed on site, as determined by Engineer.

Filtrexx® SiltSoxx™

EROSION CONTROL BARRIER

I CERTIFY:
THAT THIS PLAN CONFORMS
TO THE RULES AND REGULATIONS
OF THE REGISTER OF DEEDS.

DATE

FOR REGISTRY USE

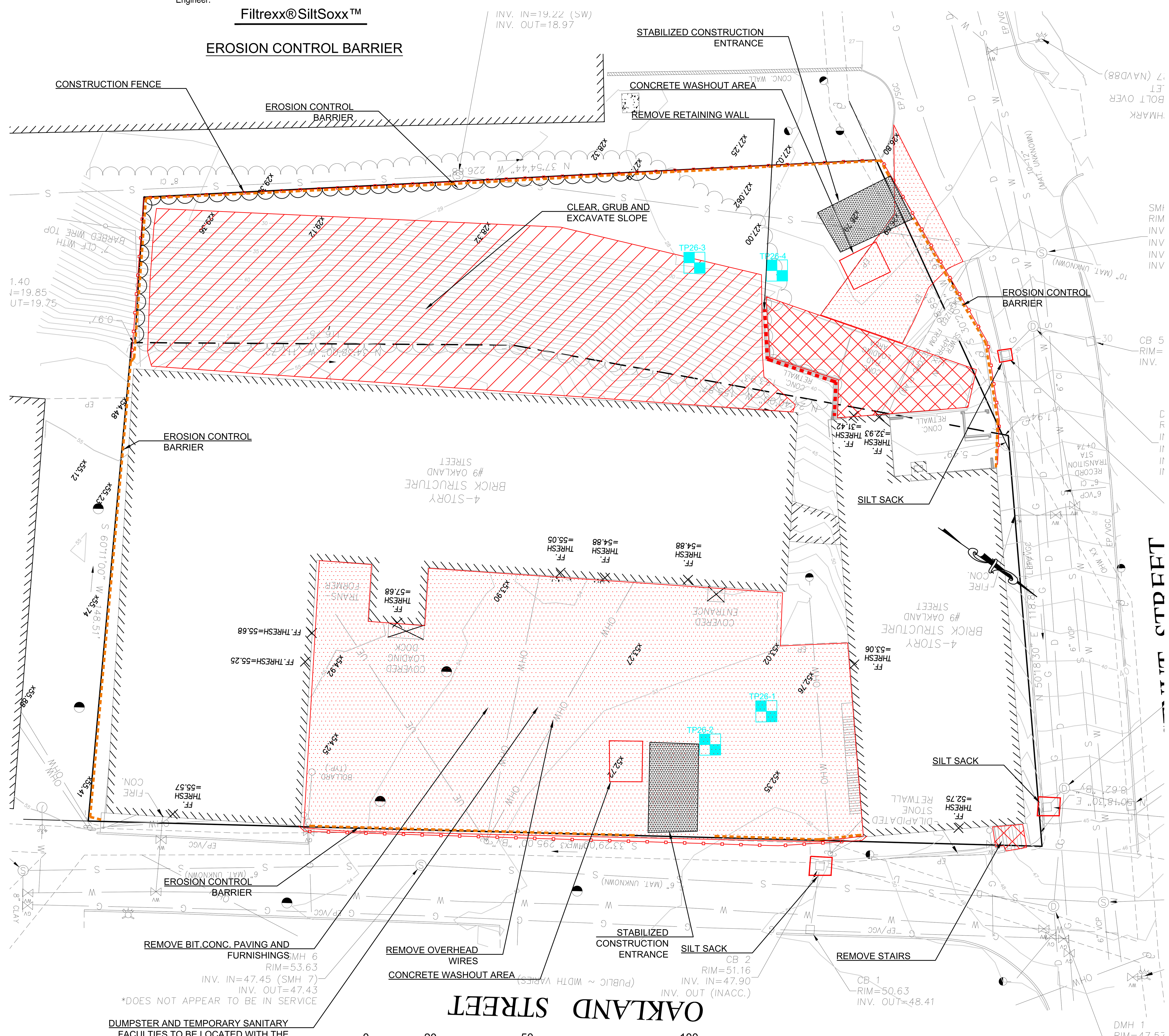

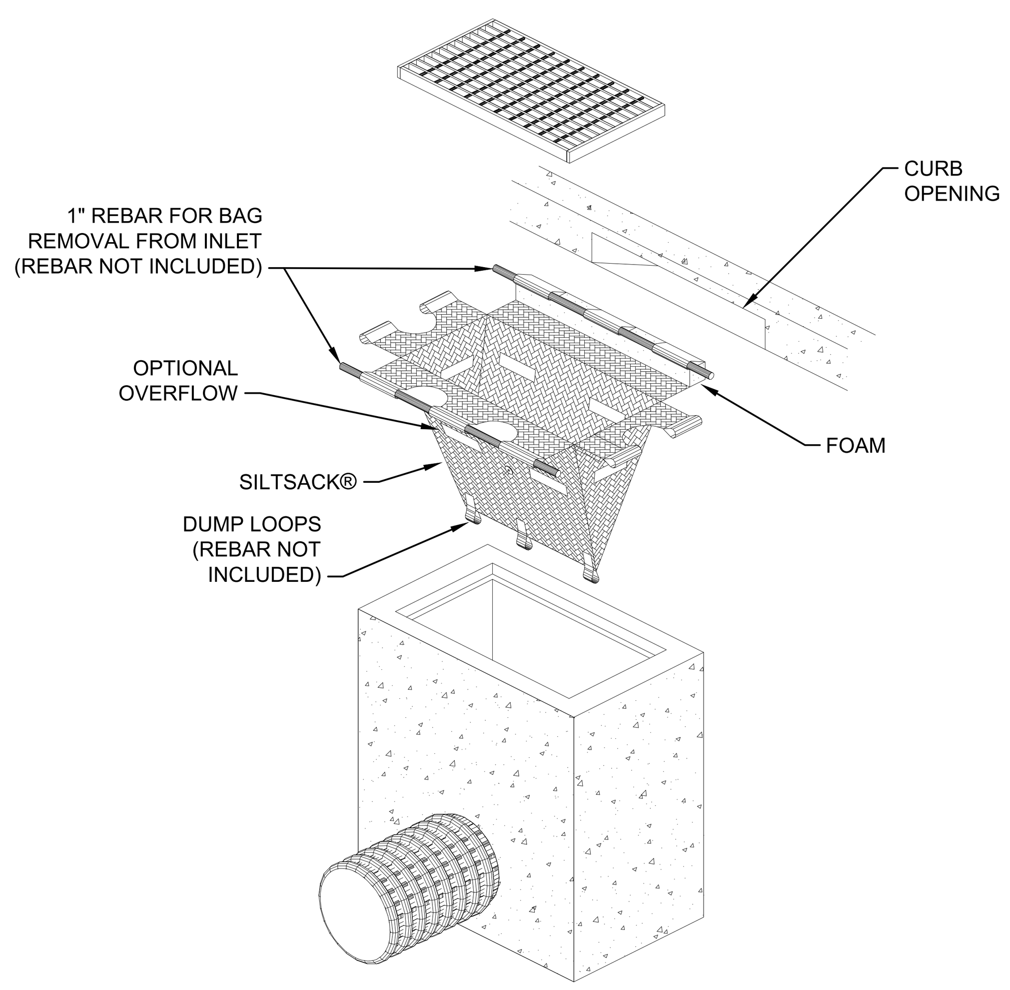

SILT SACK

NOT TO SCALE

NOT TO SCALE

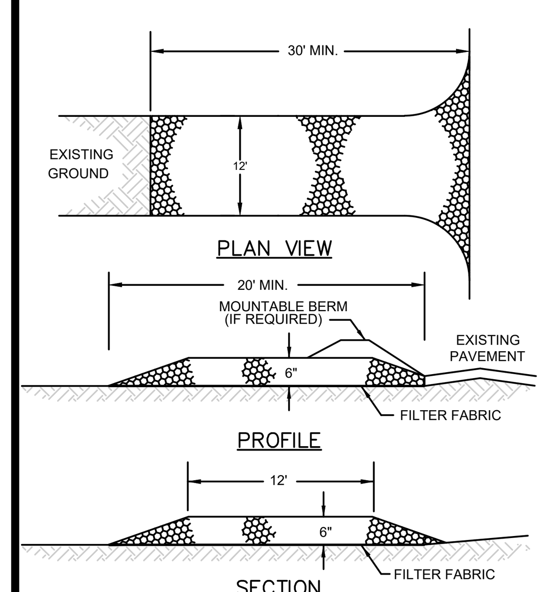

CONSTRUCTION SPECIFICATIONS

STONE SIZE - SEE GRADATION TABLE

LENGTH - 30 FOOT MINIMUM.

THICKNESS - SIX (8) INCHES (MINIMUM).

WIDTH - 12' MINIMUM

FILTER FABRIC - MIRAFI 600X OR APPROVED EQUAL.

INSTALLATION - THE AREA OF THE ENTRANCE SHOULD BE CLEARED OF ALL VEGETATION, ROOTS, AND OTHER OBJECTIONABLE MATERIAL. A ROAD STABILIZATION FILTER CLOTH CAN BE PLACED ON THE SUBGRADE PRIOR TO THE GRAVEL PLACEMENT TO PREVENT PUMPING. THE GRAVEL SHALL BE PLACED TO THE SPECIFIED DIMENSIONS.

MAINTENANCE - THE ENTRANCE SHALL BE MAINTAINED IN A CONDITION WHICH WILL PREVENT TRACKING OR FLOWING OF SEDIMENT ONTO PUBLIC RIGHTS-OF-WAY. THIS WILL REQUIRE PERIODIC TOP DRESSING WITH ADDITIONAL STONE OR ADDITIONAL LENGTH AS CONDITIONS DEMAND AND REPAIR AND/OR CLEANOUT OF ANY MEASURES USED TO TRAP SEDIMENT. ALL SEDIMENT SPILLED, DROPPED, WASHED OR TRACKED ONTO PUBLIC RIGHTS-OF-WAY MUST BE REMOVED IMMEDIATELY.

CRUSHED STONE GRADATION TABLE

SIEVE SIZE	% PASSING BY WEIGHT
4 inches	100
3 inch	90-100
2 1/2 inch	20-55
3/4 inch	0-15
3/8 inch	0-5

STABILIZED CONSTRUCTION ENTRANCE

NOT TO SCALE

CITY OF AMESBURY
OFFICE OF THE CITY OF THE CLERK

THIS IS TO CERTIFY THAT ON ____________
I RECEIVED FROM THE AMESBURY PLANNING BOARD CERTIFICATION OF ITS APPROVAL OF THIS PLAN AND THAT DURING THE (20) TWENTY DAYS NEXT FOLLOWING I HAVE RECEIVED NO NOTICE OF ANY APPEAL FROM SAID DECISION.

CLERK DATE

AMESBURY PLANNING BOARD APPROVAL

DATE

NORTH

MILLENNIUM ENGINEERING, INC.
ENGINEERING AND LAND SURVEYING
62 ELM ST. SALISBURY, MA 01952
(978) 463-8980

OWNER:

9 OAKLAND STREET
AMESBURY LLC
PO BOX 999
DANVILLE NH 03819

PROJECT TEAM

9 OAKLAND ST
CARRIAGE HILL LOFTS
4-STORY BUILDING WITH GARAGE
9 OAKLAND STREET
AMESBURY, MA

PROJECT INFO

REV	DESCRIPTION	DATE
1.0	PEER REVIEW RESP.	3/10/26

COMMONWEALTH OF MASSACHUSETTS
STEPHEN B. SAWYER
CIVIL
No. 38009
REGISTERED PROFESSIONAL ENGINEER

STAMP:

DEMOLITION & EROSION CTL. PLAN

SHEET NAME:

C6.0

SHT NO:

DR BY: SS
CHK BY: AM
PROJ NO: M254459
DATE: SEPT. 23, 2025
SCALE: 1"=30'

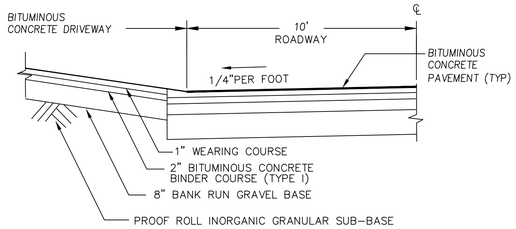

NOTES:

1. ALL DRIVEWAY APRONS WILL BE CONSTRUCTED AND PAVED AT THE SAME TIME AS THE ROADWAY PAVEMENT

1 DRIVEWAY CROSS-SECTIONS (TYPICAL)
N.T.S.

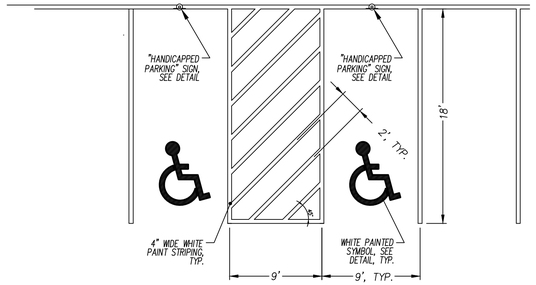

5 HANDICAP PARKING DETAIL
N.T.S.

I CERTIFY:
THAT THIS PLAN CONFORMS
TO THE RULES AND REGULATIONS
OF THE REGISTER OF DEEDS.

DATE

FOR REGISTRY USE

AMESBURY PLANNING BOARD APPROVAL

DATE

CITY OF AMESBURY
OFFICE OF THE CITY OF THE CLERK

THIS IS TO CERTIFY THAT ON _____
I RECEIVED FROM THE AMESBURY PLANNING BOARD CERTIFICATION OF ITS APPROVAL OF THIS PLAN AND THAT DURING THE (20) TWENTY DAYS NEXT FOLLOWING I HAVE RECEIVED NO NOTICE OF ANY APPEAL FROM SAID DECISION.

CLERK DATE

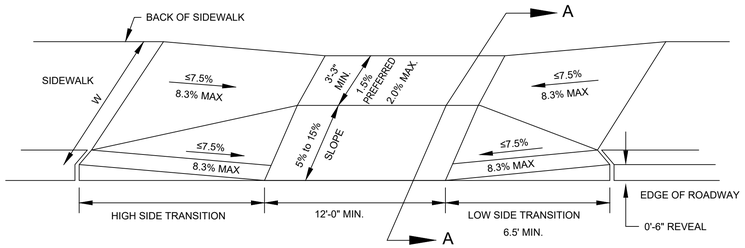

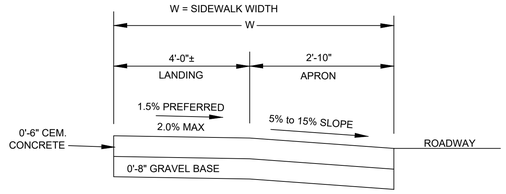

SECTION A-A

2 CONCRETE DRIVEWAY APRON
N.T.S.

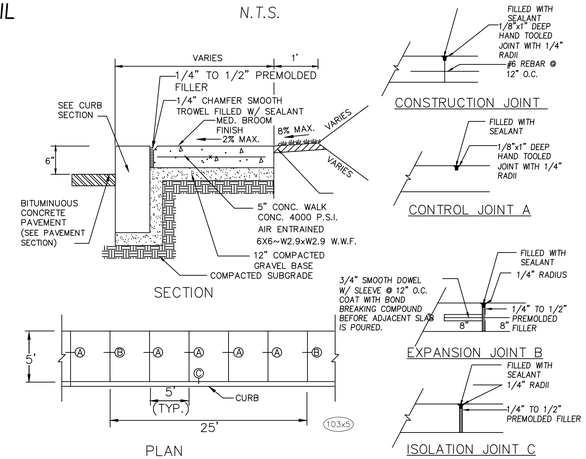

6 CONCRETE SIDEWALK
N.T.S.

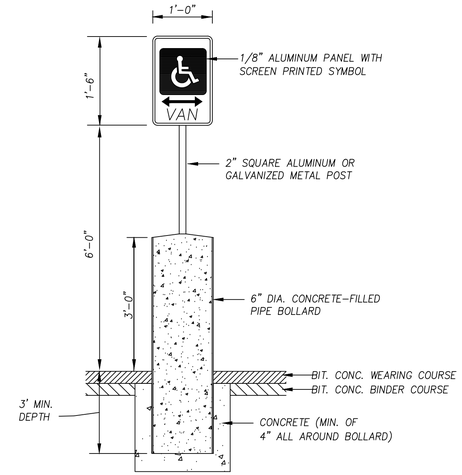

8 HANDICAP PARKING VAN-ACCESSIBLE SIGN DETAIL
N.T.S.

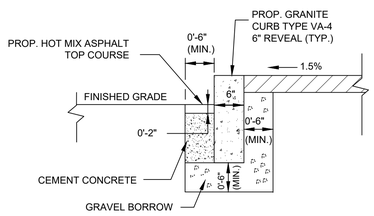

3 GRANITE CURB TYPE 1
N.T.S.

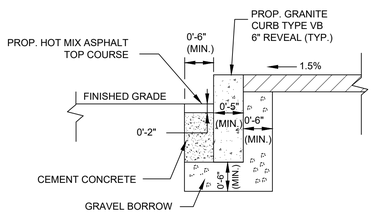

4 GRANITE CURB TYPE 2
N.T.S.

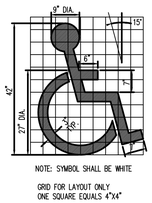

7 PAINTED HANDICAP PARKING SYMBOL
N.T.S.

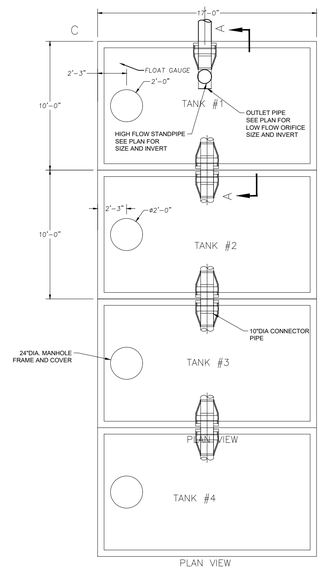

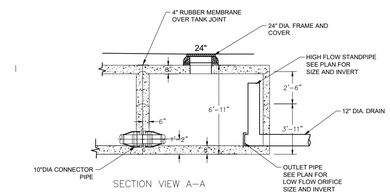

BACKFILL NOTES:
1) FOUNDATION MATERIAL SHALL BE ¾" CRUSHED STONE, MINIMUM 12" THICK.
2) BACKFILL MATERIAL SHALL BE NO GREATER THAN 1½" AND SHALL BE COMPACTED TO 95% PROCTOR. ALL COMPACTION TO BE DONE WITH HAND-OPERATED EQUIPMENT.
3) ALL BACKFILL MATERIAL AROUND AND BETWEEN TANKS SHALL BE PLACED IN 12" LIFTS EVENLY ON ALL SIDES.

NOTES:
1) CONCRETE: 5,000 PSI MINIMUM AFTER 28 DAYS.
2) REINFORCING PER ASTM-615, GRADE 60 MINIMUM 1" COVER.
3) DESIGNED FOR AASHTO HS20-44 LOADING, COVER 1 TO 5 FEET.
4) TONGUE AND GROOVE JOINT SEALED WITH BUTYL RESIN PER ASTM C990. OVERALL HEIGHT MAY INCREASE SLIGHTLY DUE TO THE BUTYL RESIN USED.
5) EXTERIOR COATED.

WEIGHTS:
47" BOTTOM 31,500LBS
30" CENTER 11,300LBS
8" TOP 16,800LBS

10,000 GALLON FIRE CISTERN SHOWN
OTHER SIZES AVAILABLE

9 SHEA CONCRETE SOLID TANK DETENTION CHAMBER
N.T.S.

NORTH

MEI
MILLENNIUM ENGINEERING, INC.
ENGINEERING AND LAND SURVEYING
62 ELM ST. SALISBURY, MA 01952
(978) 463-8980

OWNER:

9 OAKLAND STREET
AMESBURY LLC
PO BOX 999
DANVILLE NH 03819

PROJECT TEAM

9 OAKLAND ST
OAK STREET LOFTS
4-STORY BUILDING WITH GARAGE
9 OAKLAND STREET
AMESBURY, MA

PROJECT INFO

REV	DESCRIPTION	DATE
1.0	PEER REVIEW	3/30/2026

COMMONWEALTH OF MASSACHUSETTS
STEPHEN B. SAWYER
CIVIL
No. 35664
REGISTERED PROFESSIONAL ENGINEER

STAMP:

CONSTRUCTION DETAILS

SHEET NAME:

SHEET: C7.0

SHT NO:

DR BY: SBS
CHK BY: AM
PROJ NO: M254459
DATE: SEPT. 23, 2025
SCALE: AS NOTED

E:\sdskproj-2025\M254459\DWG\M254459-TITLE.dwg

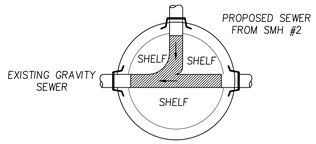

SMH #1 PLAN VIEW

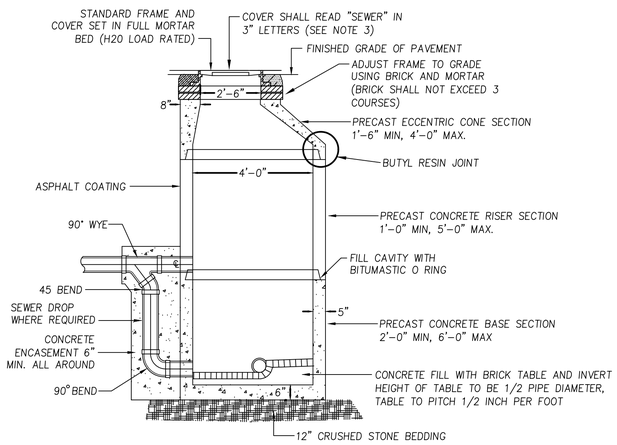

NOTES:
1) SEWER MANHOLES SHALL CONFORM TO ASTM C478 AND ASTM C185
2) STEEL REINFORCED COPOLYMER POLYPROPYLENE PLASTIC STEPS SHALL CONFORM TO LATEST ASTM C478 SPEC.
3) COVER SHALL BE LEBARON FOUNDRY (MODEL NO. LA246), MECHANICS IRON FOUNDRY, NEEHAN FOUNDRY, OR EQUAL.
4) ALL PENETRATIONS IN THE MANHOLE FOR INSERTION OF PIPING SHALL BE SEALED WITH KOR-N-SEAL FLEXIBLE PIPE CONNECTION.
5) FLAT TOP STRUCTURES SHALL BE PRECAST SECTIONS AND HAVE A 28 DAY COMPRESSIVE STRENGTH OF 5000 PSI REINFORCED FOR AASHTO H-20 LOADING.
6) CONICAL SECTIONS MAY BE SUBSTITUTED FOR FLAT-TOP STRUCTURES IN AREAS WHERE MORE THAN 4 FEET OF COVER IS PROVIDED FOR DRAIN PIPE.

1 PRECAST SEWER DETAIL

N.T.S.

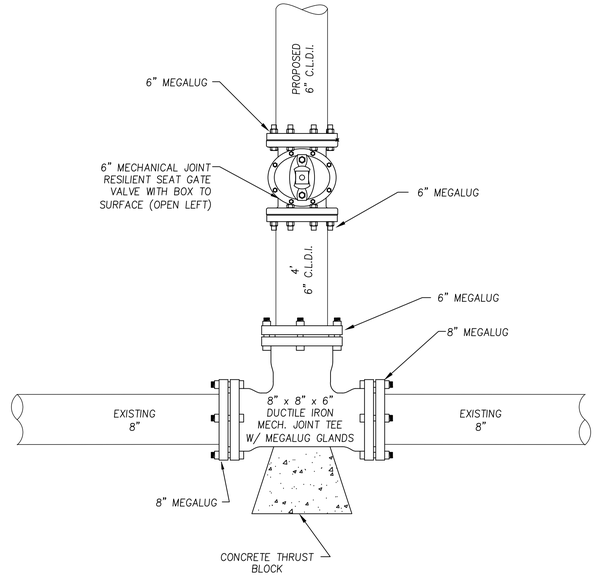

NOTES: 1) TIE IN SHALL BE COORDINATED WITH THE WATER DEPARTMENT.
2) THE CONTRACTOR IS RESPONSIBLE FOR ALL OFF-SITE NOTIFICATIONS TO IMPACTED PROPERTIES.

2 WATER MAIN CONNECTION DETAIL

N.T.S.

I CERTIFY:
THAT THIS PLAN CONFORMS TO THE RULES AND REGULATIONS OF THE REGISTER OF DEEDS.

DATE

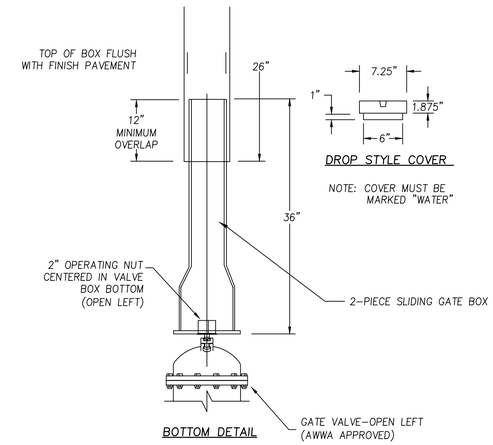

3 TYPICAL GATE VALVE BOX DETAIL

N.T.S.

FOR REGISTRY USE

AMESBURY PLANNING BOARD APPROVAL

DATE

CITY OF AMESBURY
OFFICE OF THE CITY OF THE CLERK

THIS IS TO CERTIFY THAT ON _____ I RECEIVED FROM THE AMESBURY PLANNING BOARD CERTIFICATION OF ITS APPROVAL OF THIS PLAN AND THAT DURING THE (20) TWENTY DAYS NEXT FOLLOWING I HAVE RECEIVED NO NOTICE OF ANY APPEAL FROM SAID DECISION.

CLERK DATE

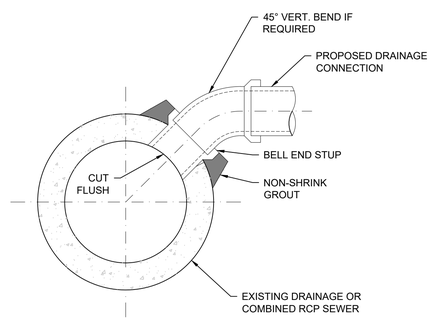

4 DRAIN SERVICE CONNECTION DETAIL

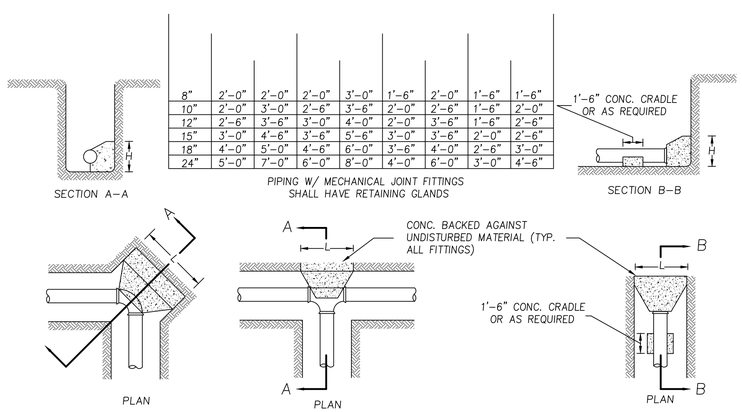

8"	2'-0"	2'-0"	2'-0"	3'-0"	1'-6"	2'-0"	1'-6"	1'-6"
10"	2'-0"	3'-0"	2'-6"	3'-6"	2'-0"	2'-6"	1'-6"	2'-0"
12"	2'-6"	3'-6"	3'-0"	4'-0"	2'-0"	3'-6"	1'-6"	2'-6"
15"	3'-0"	4'-6"	3'-6"	5'-6"	3'-0"	3'-6"	2'-0"	2'-6"
18"	4'-0"	5'-0"	4'-6"	6'-0"	3'-6"	4'-0"	2'-6"	3'-0"
24"	5'-0"	7'-0"	6'-0"	8'-0"	4'-0"	6'-0"	3'-0"	4'-6"

NOTES

1. VALUES SHOWN ARE FOR TEST PRESSURE OF 150 PSI WITH A 100 PSI SURGE ALLOWANCE.
2. THRUST BLOCKS SHALL NOT BE PLACED AGAINST THE FOLLOWING SOILS: PEAT, ORGANIC SILT AND ORGANIC SOILS, SOFT CLAY, RUBBISH FILL AND OTHER UNSUITABLE ARTIFICIAL FILL, SHATTERED SHALE, INORGANIC SILT AND VERY FINE SANDS.
3. POURED CONCRETE THRUST BLOCKS SHALL NOT COVER ANY JOINTS, CLAMPS, NUTS, BOLTS, ETC.

5 THRUST BLOCK DETAILS

N.T.S.

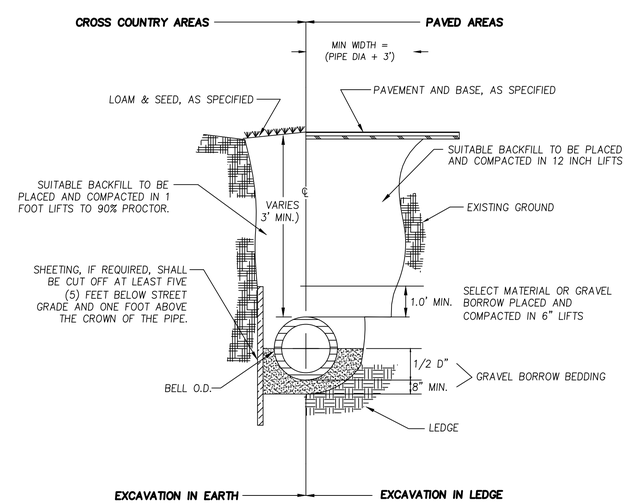

6 TYPICAL TRENCH DETAIL

N.T.S.

NORTH

MEI

MILLENNIUM ENGINEERING, INC.
ENGINEERING AND LAND SURVEYING
62 ELM ST. SALISBURY, MA 01952
(978) 463-8980

OWNER:

9 OAKLAND STREET
AMESBURY LLC
PO BOX 999
DANVILLE NH 03819

PROJECT TEAM

9 OAKLAND ST
OAK STREET LOFTS
4-STORY BUILDING WITH GARAGE
9 OAKLAND STREET
AMESBURY, MA

PROJECT INFO

REV	DESCRIPTION	DATE
1.0	PEER REVIEW	3/30/2026

STAMP:

COMMONWEALTH OF MASSACHUSETTS
STEPHEN B. SAWYER
No. 39604
REGISTERED PROFESSIONAL ENGINEER

CONSTRUCTION DETAILS

SHEET NAME:

SHEET: C7.1

SHT NO:

DR BY: SBS
CHK BY: AM
PROJ NO: M254459
DATE: SEPT. 23, 2025
SCALE: AS NOTED

E:\sdskproj-2025\M254459\DWG\M254459-TITLE.dwg

INLET	D	A	B	INLET	D	A	B
4"	3'-6"ø	3'-0"	2'-6"	8"	5'-0"ø	6'-0"	5'-0"
5"	3'-6"ø	5'-0"	4'-0"		5'-6"x 5'-6"	4'-6"	4'-0"
	3'-6"x 3'-6"	4'-0"	3'-0"		6'-0"ø	4'-0"	3'-6"
	3'-6"x 3'-6"	3'-6"	3'-0"		6'-0"x 6'-0"	3'-0"	2'-6"
	3'-6"x 3'-6"	3'-0"	2'-6"		6'-6"ø	3'-6"	3'-0"
	3'-6"x 3'-6"	3'-0"	2'-6"		6'-6"x 6'-6"	3'-0"	2'-6"
6"	4'-0"ø	5'-0"	4'-6"	10"	5'-6"ø	7'-6"	6'-6"
	4'-0"x 4'-0"	4'-0"	3'-6"		6'-0"x 6'-0"	5'-6"	4'-6"
	4'-6"ø	4'-0"	3'-6"		6'-0"ø	6'-6"	5'-6"
	4'-6"x 4'-6"	3'-6"	3'-0"		6'-6"x 6'-6"	5'-0"	4'-0"
	5'-0"ø	3'-6"	3'-0"				
	5'-0"x 5'-0"	3'-0"	2'-6"				

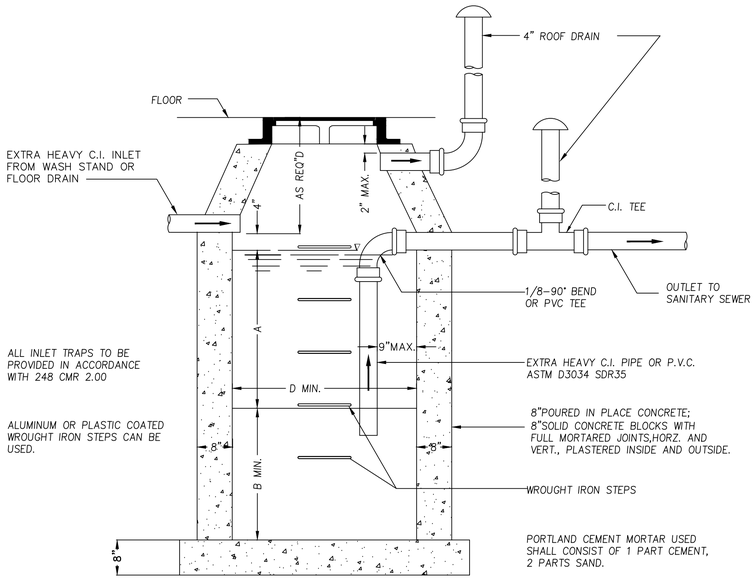

NOTES:

1. FOR INLETS LARGET THAN 10", THE DESIGN AND DIMENSIONS WILL BE DETERMINED FOR EACH PARTICULAR CASE.
2. PRE-CAST SEPARATORS ARE TO HAVE ALL SPECIFIED HOLES EITHER CORE-BORED OR CAST IN PLACE.
3. EXAMPLE 2

1 OIL AND GRIT SEPARATOR DETAIL

N.T.S.

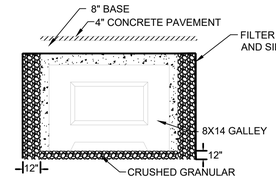

DETAIL SECTION

HEIGHT(H)	VOLUME(EA)	WEIGHT
2'-0"	200CF	14,900#

NOTES:

1. SEE SITE PLANS FOR OUTLET ORIFICE LOCATIONS
2. CONCRETE: 5,000 PSI MINIMUM AFTER 28 DAYS.
3. DESIGNED FOR AASHTO HS-20 LOAD, 0 TO 5FT COVER.
4. END & SIDE UNITS DO NOT HAVE FLOW-THRU OPENINGS.
5. GALLEYS TO BE SHEA CONCRETE 8x14 GALLEY CHAMBERS OR EQUAL.
6. OUTLET VERTICAL ORIFICE SET AT INVERT 11.91.

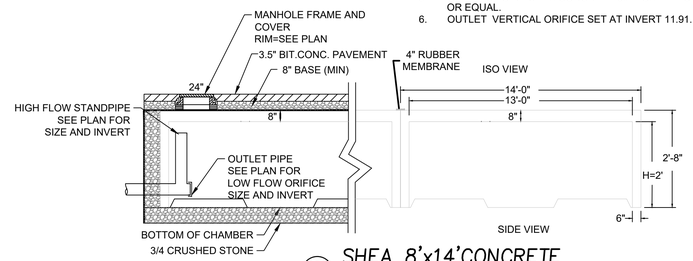

SUBSURFACE AREA	BOT. STONE ELEV.	BOT. CHAMBER ELEV.	TOP CHAMBER ELEV.	100 YR STORM ELEV.
SUB. DET. 1	48.08	45.58	48.25	47.50

2 SHEA 8'x14'CONCRETE DETENTION CHAMBER

N.T.S.

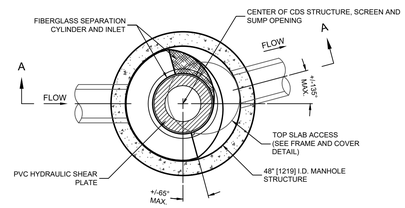

PLAN VIEW B-B
N.T.S.

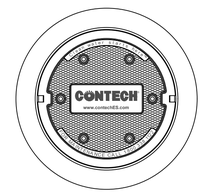

FRAME AND COVER
(DIAMETER VARIES)
N.T.S.

***PROVIDE CATCH BASIN GRATE IN PLACE OF SOLID COVER**

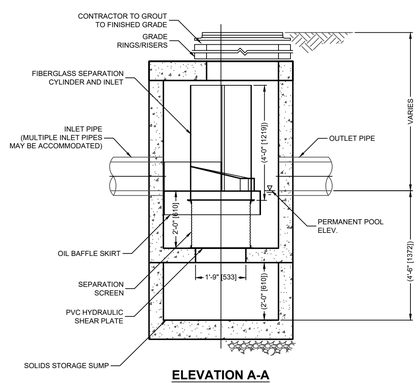

ELEVATION A-A
N.T.S.

4 WATER QUALITY CATCH BASIN DETAIL

N.T.S.

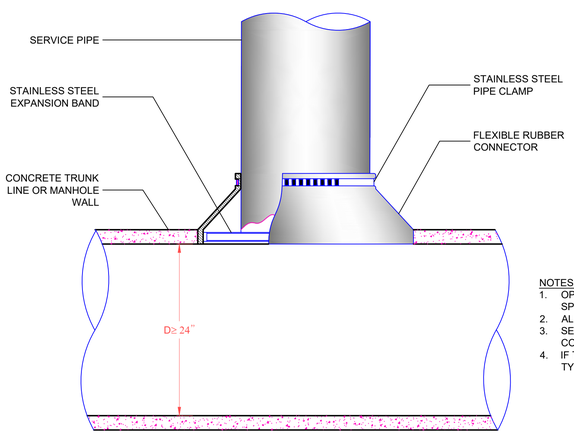

NOTES:

1. OPENING IN CONCRETE WALL SHALL BE CORED USING HIGH SPEED DIAMOND DRILL
2. ALL METAL FIXTURES SHALL BE OF STAINLESS STEEL
3. SERVICE LINE SHALL BE FLUSH WITH THE INSIDE OF THE CONCRETE PIPE OR WALL
4. IF TRUNK LINE DIAMETER IS LESS THAN 24" THEN A SADDLE TYPE CONNECTION WILL BE USED

3 DRAIN SERVICE CONNECTION AT MANHOLE WALL DETAIL

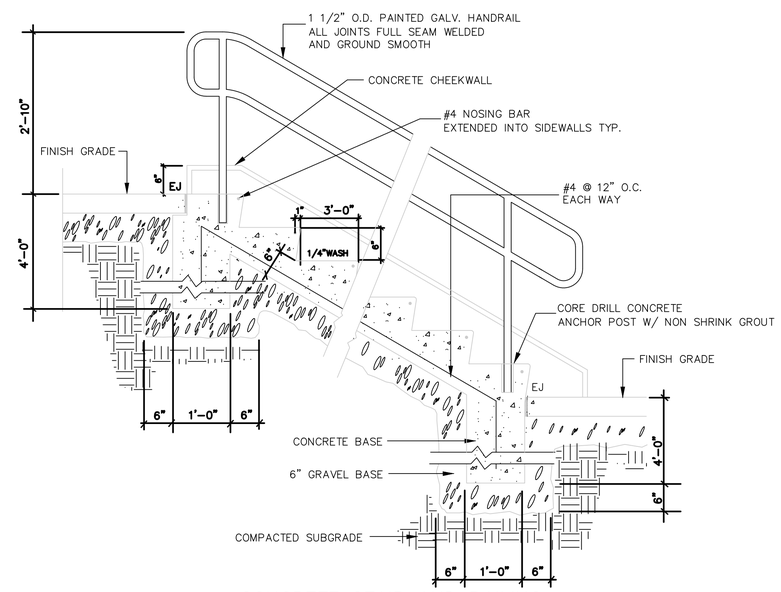

5 CONCRETE STAIR AND RAILING DETAIL

NOT TO SCALE

I CERTIFY:
THAT THIS PLAN CONFORMS TO THE RULES AND REGULATIONS OF THE REGISTER OF DEEDS.

DATE

FOR REGISTRY USE

AMESBURY PLANNING BOARD APPROVAL

DATE

CITY OF AMESBURY
OFFICE OF THE CITY OF THE CLERK

THIS IS TO CERTIFY THAT ON _____ I RECEIVED FROM THE AMESBURY PLANNING BOARD CERTIFICATION OF ITS APPROVAL OF THIS PLAN AND THAT DURING THE (20) TWENTY DAYS NEXT FOLLOWING I HAVE RECEIVED NO NOTICE OF ANY APPEAL FROM SAID DECISION.

CLERK DATE

NORTH

MEI
MILLENNIUM ENGINEERING, INC.
ENGINEERING AND LAND SURVEYING
62 ELM ST. SALISBURY, MA 01952
(978) 463-8980

OWNER:

9 OAKLAND STREET
AMESBURY LLC
PO BOX 999
DANVILLE NH 03819

PROJECT TEAM

9 OAKLAND ST
OAK STREET LOFTS
4-STORY BUILDING WITH GARAGE
9 OAKLAND STREET
AMESBURY, MA

PROJECT INFO

REV	DESCRIPTION	DATE
1.0	PEER REVIEW	3/30/2026

STAMP:

COMMONWEALTH OF MASSACHUSETTS
STEPHEN B. SAWYER
CIVIL
No. 52405
REGISTERED PROFESSIONAL ENGINEER

SHEET NAME:

CONSTRUCTION DETAILS

SHT NO:

SHEET: C7.2

DR BY: SBS
CHK BY: AM
PROJ NO: M254459
DATE: SEPT. 23, 2025
SCALE: AS NOTED

E:\sdskproj-2025\M254459\DWG\M254459-TITLE.dwg