Mead, Talerman & Costa, LLC
Attorneys at Law

30 Green Street
Newburyport, MA 01950
Phone 978.463.7700
Fax 978.463.7747

www.mtclawyers.com

November 8, 2024

By Electronic Submission and Hand

Pascal Rettig, Chair
Amesbury Planning Board
City of Amesbury
62 Friend Street,
Amesbury, Massachusetts 01913

Re: 80 Haverhill Road – Planning Board Historic Preservation Special Permit Request

Dear Chair and Members of the Board:

Reference is made to the above-captioned matter. In that connection, this firm represents 80 Haverhill Road, LLC (the "Applicant"), relative to an application for an Historic Preservation Special Permit ("HP-SP") under section XI.J2 and Site Plan Review under section XI.C[1] of the Amesbury Zoning Ordinance ("Ordinance") for multi-family housing at 80 Haverhill Road, Amesbury, MA (Assessor's Map 85, Lot 59) (the "Property"). The Applicant appeared before the Historical Commission on November 7th where the Historical Commission deemed the existing residential structure on the Property (the "Structure") historically significant and favorably discussed the proposed plans. The Applicant is scheduled to appear before the Board for a pre-application conference at the Board's November 25, 2024 meeting and requests to appear before the Board for a formal hearing on December 9, 2024.

The Property is in the R-40 Zoning District ("R-40") under the Ordinance. Currently, the Property has four residential units in the existing two-story residential Structure on the Property. Over a year ago, the once existing barn had to be removed due to an order from the Building Inspector. The Applicant received the permission of the Historical Commission to remove the barn. Now, the Applicant proposes to renovate the existing residential Structure and construct a new residential structure in the style of a barn which has similar architecture to the prior barn and is placed in a similar position as the original barn[2]. The Applicant proposes eight total units; four in the residential Structure and four in the barn structure. One of the eight units will be set aside for Affordable Housing, as required by the Section XI.J2.7.3.

The Applicant requires relief from the Board because the Property is pre-existing non-conforming for lot area of 27,332 sq. ft. where 40,000 sq. ft. is required, lot frontage of 132.84 feet where 140 feet is required, front setback of 36.6 feet (existing 36.6 feet) where 40 feet is required, and a side setback of 17.2 feet (existing

[1] Note, XI.J2 approval satisfies the requirements of XI.C, but we are submitting an analysis of the Site Plan requirements and a Waiver Request list as attachments.
[2] A rendering, site plans, landscape plan, architectural plans, photographs and proposed Preservation Restriction are included hereto as attachments. A drainage report and a traffic memo will be submitted concurrently.

Millis Office
730 Main Street, Suite 1F
Millis, MA 02054
Phone/Fax 508.376.8400

New Bedford Office
227 Union Street, Suite 606
New Bedford, MA 02740

16.7 feet) where 25 feet is required. The proposal also requires waivers for new nonconformities for rear setback of 42.6 feet (existing 79.1 feet) where 50 feet is required, stories with 4 (2 existing), where 2.5 are allowed, and building area of 20.5% (existing 13.5%) where a maximum of 15% is allowed. The Applicant will also request waivers from Section VIII for the width of an aisle between parking spaces and two-way traffic, 20 feet where 24 feet is required, and from the requirement that driveways be placed a minimum of 5 feet from property lines. The proposed driveway is 3.5 feet from the property line which is no change from the existing distance from the driveway to the property line.

The proposal conforms for open space with 50.7% (existing 61.5%) where a minimum of 50% is required, and building height of 29.6 feet where a maximum of 35 feet is allowed. Given that the use is going from a multifamily and will continue to be a multifamily, there are no intensifications of the dimensional nonconformities, but there is a modification to the Structure. Therefore, the Applicant will be requesting a waiver from the dimensional requirements as set forth on the plans. Further, we believe that given that the barn is connected with a roofed connector to the main house that it would be considered one structure. In the event it is not, under section ZI.J2.2.b.vii, the Board may allow more than one principal structure for residential uses, as proposed by the Applicant.

Historic Preservation – Special Permit

In order to pursue the project, the Applicant requires a Historic Preservation – Special Permit ("HP–SP") pursuant to section XI-J2 of the Ordinance. The Applicant's proposal satisfies both the general requirements of Section X-J(5) and the specific requirements of XI-J2 of the Ordinance, which allows the Board to permit the above nonconformities if it finds that "the proposed redevelopment, alteration, extension or addition to the existing historic Structure meets the provisions of Section XL.J2.5, shall not result in overburdening of the site, and meets the historic preservation purpose and intent of Section XI.J2."

General Criteria:

First, the Board may grant a special permit because the general conditions of Section X-J(5) are fulfilled as follows.

1. "The use requested is listed in the table of use regulations as a special permit for which the application is made."

   Historic Uses (Section XI.J2) is listed as allowable by Special Permit from the Planning Board.

2. "The requested use is essential and/or desirable to the public convenience or welfare."

   By including the use in the table of uses the City of Amesbury has determined it to be desirable in the R-40 zone. The proposed multifamily use will provide much needed housing opportunities within the City. In addition, the City Council recently expanded the R-40 zone to specifically encompass the Property.

3. "The requested use will not create undue traffic congestion, or unduly impair pedestrian safety."

   As indicated in the traffic memo submitted concurrently the project will result in "a slight increase in trips during the AM and PM peak hours (2 additional trips). The increase of 27 daily trips is de

minimum and will have no impact on the traffic flow in Haverhill Road. Additionally, ample parking space is provided for residents." The proposal uses the same ingress/egress as the existing four-unit use.

4. "The requested use will not overload any public water, drainage, or sewer system or any other municipal system to such an extent that the requested use or any developed use in the immediate area or in any other area of the City will be unduly subjected to hazards affecting health, safety, or general welfare."

   The city has water and sewer service at the site and that will continue. The Applicant will meet all of the requirements of the water and sewer department. The Applicant is concurrently submitting a Stormwater Report. It is not anticipated the added units will have a detrimental impact on the water and/or sewer systems of the City. Certainly, the proposed impact on city utility services will not create a hazard or negatively affect the health, safety or general welfare of any area of the city.

5. "Any special regulations for the use set forth in Section XI of this bylaw are fulfilled."

   There are no special regulations for multifamily use under Section XI.

6. "The requested use will not impair the integrity or character of the district or adjoining districts nor be detrimental to the health or welfare."

   The use of Multifamily will not impair the integrity or character of the neighborhood or adjoining districts nor be detrimental to the health or welfare. Indeed, the City recently extended the R-40 district to cover the Property and HP–SPs are available to residential districts.

7. "The requested use will not by its addition to the neighborhood cause an excess of that particular use that could be detrimental to the character of said neighborhood."

   Multi-family use will not cause an excess of this use in this area of the city. First, the Property is already used for multi-family purposes. Also, the Property lies in a residential district. A residential use could not be detrimental to the character of a neighborhood in a residential district.

<u>Specific Criteria of Section XI-J2</u>:

In addition to the general criteria above, the Board may grant a HP-SP for the below reasons. First, the Board has the authority to grant an HP-SP without the approval of any other special permit granting authority in the R-40 District. The Board may grant an HP-SP to "authorize actions that would otherwise not comply with the provisions of this Ordinance and that would allow the renovation, repair, of adaptive reuse of historic or architecturally significant buildings or structures. The granting of a HP-SP shall also constitute approval and compliance with Site Plan Review requirements outlined in Section XI.C[3]. The Board may grant waivers from

[3] Although not required, the proposal satisfies the requirements of Section XI.C as shown in the attached analysis.

specific sections of the Ordinance… without further approval from any other special permit granting authority". Here, the Applicant is renovating, repairing and reusing the historic and architecturally significant Structure.

If the Board considers the new barn to be a separate structure, XI-J2.2.b.2 allows for more than one principal structure for residential uses.

Next, when determining the total number of proposed residential dwelling units and volume of the buildings, the Board shall take into consideration:

1. The visual and physical impacts of the proposed project on the existing historic building's height, scale, massing, and volume;

The Project proposes to construct a new Barn in a similar footprint of the previous barn, in harmony with the historic Structure. The Applicant has worked closely with the City staff to create a design which properly reflects the historic setting of the Property and meets both the goals of the City to create and maintain housing and secure preservation of its historic character .

2. the proposed floor plans and building layout, open space, and parking layout;

The Project includes appropriate plans and layout, open space and parking for the proposed number of units. Again, the Applicant worked hand in hand with the City to go the extra mile to not create too much impervious surface for the sole purpose of providing parking. Here the Applicant has gone to the expense of providing parking under the new barn structure and enclose parking in between the two structures by mimicking the prior milk house connection between the house and the barn.

3. the impact of the proposed alterations, extensions or additions on the architectural style, character and integrity of the existing historic building(s) and

The Structure will be restored with appropriate materials and the new barn will complement it in architectural style.

4. the overall impacts to the general character of the surrounding neighborhood. Such consideration will also include any impacts on the character-defining features of the existing building(s) including, but not limited to: window patterns, entryways, steeples, towers, chimneys, stairwells, roof lines, dormers, or other skyline elements."

The Historic Structure will be restored with the vinyl siding being removed and replaced with cedar clapboards on the front and sides and hardie plank clapboards on the rear, the mismatched vinyl windows will be replaced with 2/2 clad simulated divided light windows with 3D muntin bars and the left side enclosed porch will be restored to an open porch with architecturally appropriate columns. The corner boards and dentil work will be repaired and restored and the roof will be replaced with architectural shingles. The two main chimneys, while removed inside will be rebuilt of brick above the roof. The third chimney in the rear will be removed. This work will allow this Structure to shine as it once did as the large farm house on the hill.

Therefore, the new configuration and volume of structures and the proposed eight total units should be considered appropriate.

Next, under XI-J2.2.b.3.vi, if the new barn is considered a new structure, because the project is consistent with the purpose of the HP-SP the Board may waive dimensional requirements for the new barn by 50%, namely the rear setback (42.6 ft. proposed and 25 ft. allowed at 50% waived) and maximum building area (20.5% proposed and 22.5% allowed at 50% waived.)

Next, under XI-J2.2.b.3.vii, if considered a new structure, the Applicant requests that the Board waive the requirement that the Barn be 67% or less the gross floor area of the existing Structure because the Barn is instrumental in the historic preservation of the main Structure.

Next under XI-J2.2.b.4, the Applicant requests the Board wave the requirements for the rear setback and maximum building area if the Board considers the barn to be a part of the existing Structure. The Applicant also requests a waiver from the requirements to comply with the requirements for lot area, frontage, front setback, side setback, stories, the requirements under Section VIII for the width of an aisle between parking spaces and two-way traffic, and from the requirement that driveways be placed a minimum of five feet from property lines all allowed by the recently adopted amendments to the Ordinance. The Board can do so because, as developed with guidance from the City, meet the historic preservation purpose and intent of Section XI.J2 and will not overburden the site.

Applicability of Section XI-J2:

Section XI-J2 applies to the proposal because the Structure is over 75 years old and has been deemed Historically Significant by the Amesbury Historical Commission.

Design Standards & Review Criteria:

The proposal meets the requirements of Section XI.J2.5 for the following reasons. The proposal respects the actual history of the property — the main Structure is being restored and the new barn honors the previous barn. The proposal does not add a "false sense of historical development." Distinctive features such as the corner boards and dentil work will be repaired and preserved. The two main chimneys will be rebuilt above the roof of the main Structure and the roof configuration will remain the same, but for the rear. The mismatched vinyl windows on the main Structure will be replaced with 2/2 clad simulated divided light windows with 3D muntin bars. Natural siding will replace the vinyl siding on the exterior of the main Structure. Four of the 16 parking spaces are in the same area, which was once the milk house and is enclosed in the ell off of the main Structure. There are four directly behind those covered spaces in a tandem style. After many iterations in design and engineering and at the urging of the City staff, there are also four parking spaces underneath the barn structure to the rear and four at grade exterior in the rear of the barn. The proposal has been thoughtfully designed in close collaboration with the City and should be found to satisfy the design & review criteria of the Ordinance.

Findings Required:

The Board must find the following for final action under Section XI.J2.6:

1. "The historic character of a building, structure or the lot (s) shall be retained and preserved by the grant of the special permit. The removal of historic materials or alteration of features and spaces that characterize the affected lot(s) has not been proposed. The proposed renovation, repair or adaptive reuse preserves the historical and architectural features of the building(s), structure(s) or element(s);"
    a. The proposal preserves the historic character of the Property. In addition, the Applicant will enter into a historic preservation restriction.
2. "The lot(s) shall be used for its historic purpose or be placed in a new use that requires minimal change to the defining characteristics of the existing historic building(s) or structure(s); and its environment;"
    a. The Property has been used for multi-family and will continue to be used for multi-family purposes. The historic Structure is being restored and minimally changed.

3. "The proposed uses or the relief from the dimensional requirements are necessary to maintain the historic or architecturally significant building(s), structure(s) or elements(s) on the site on which is was originally constructed or to relocate it back to such a site;"
    a. Many of the nonconformities are pre-existing and the other requested reliefs are necessary to complete the project and to restore the historic Structure.

4. "The design standards under this Ordinance have been incorporated in the reconstruction, rehabilitation or preservation of the existing historic building(s) or Structures(s) and the design of all new buildings or structures; and;"
    a. The proposal has been thoughtfully designed in close collaboration with the City and satisfies the design & review criteria of the Ordinance.

5. "The proposed use will not generate negative impacts to the surrounding neighborhood or overall zoning district or that the mitigation of any negative impacts has been clearly established and so determined by the Planning Board."
    a. Multi-family use is appropriate for a residential district, and the proposal will elevate the surrounding neighborhood.

Conclusion:

In accordance with the recent amendments to section ZI.J2 of the Ordinance the Board may grant a special permit in R-40 to allow for multifamily residential uses and to authorize actions that would not otherwise comply with the provisions of the Ordinance that would allow for the renovation, repair or adaptive reuse of historically or architecturally significant buildings. The Applicant will repair and renovate the historic residential Structure and rebuild the barn. The proposed redevelopment and addition to the existing historic Structure meets the provisions of Section XL.J2.5, does not result in overburdening of the site, and meets the historic preservation purpose and intent of Section XI.J2; namely it preserves the continued use of a historic

Structure, proposes an adaptive reuse of the Property by broadening the multi-family use and provides a public benefit by creating greater density of housing stock in a thoughtful and appropriate matter.

As stated above, the Applicant appeared before the Historical Commission on November 7th which confirmed the historic significance of the Structure. The Applicant shared a draft a historic preservation restriction on the Property, which the Applicant will ask the Historical Commission to approve if this Board grants the requested relief. The Applicant will review the draft proposal in a pre-application conference at your November 25, 2024 meeting. The Applicant looks forward to formally presenting the plans at the hearing on December 9th.

Respectfully submitted,
80 Haverhill Road, LLC
By its Attorney,

LLM by BJR

Lisa L. Mead
Benjamin J. Roberts

cc: Client

Attachments

Attachment:

Rendering

Attachment:

Site Plans

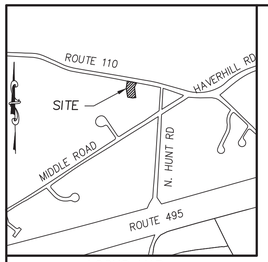

LOCUS MAP
1"=1000'

BASIS OF BEARINGS
MASSACHUSETTS STATE PLANE
COORDINATE SYSTEM
NAD-83

OWNER OF RECORD
80 HAVERHILL ROAD, LLC
BK. 41666 PG. 459

PLAN REFERENCES
PLAN BOOK 121 PLAN 12
1926 S.H.L.O.

SITE PLAN
FOR
80 HAVERHILL ROAD
IN
AMESBURY, MA

NOVEMBER 2024

CITY OF AMESBURY
OFFICE OF THE CITY OF THE CLERK

THIS IS TO CERTIFY THAT ON _____
I RECEIVED FROM THE AMESBURY PLANNING BOARD CERTIFICATION OF ITS APPROVAL OF THIS PLAN AND THAT DURING THE (20) TWENTY DAYS NEXT FOLLOWING I HAVE RECEIVED NO NOTICE OF ANY APPEAL FROM SAID DECISION.

_____
CLERK DATE

FOR REGISTRY USE

AMESBURY PLANNING
BOARD APPROVAL

_____
_____
_____
_____
_____
_____

_____
DATE

PLAN INDEX

SHEET NO.	TITLE
C1	COVER SHEET
C2	GENERAL NOTES & LEGEND
C3	BOUNDARY PLAN
C4	EXISTING CONDITIONS
C5	SITE PLAN
C6	GRADING AND DRAINAGE PLAN
C7	UTILITIES PLAN
C8	EROSION AND SEDIMENTATION PLAN
C9–C11	CONSTRUCTION DETAILS

ZONING TABLE

ADDRESS – ASSESSORS MAP 85 LOT 59 ZONING DISTRICT R40			
	REQUIRED	EXISTING	PROPOSED
LOT AREA:	40,000 S.F.	27,332 S.F.	27,332 S.F.**
LOT FRONTAGE:	140 FT.	132.84 FT.	132.84 FT.**
FRONT SETBACK:	40 FT.	36.6 FT.	36.6 FT.**
SIDE SETBACK:	25 FT.	16.7 FT.	17.2 FT.**
REAR SETBACK:	50 FT.	79.1 FT.	42.6 FT.**
BLDG HEIGHT:	35 FT.	29.6'*	29.6'*
MAX. STORIES	2.5	2	4**
MAX. BLDG AREA:	15%	13.5%	20.5%**
MIN OPEN SPACE:	50%	61.5%	50.7%

*THE VERTICAL DISTANCE FROM THE AVERAGE FINISH GRADE OF THE ADJACENT GROUND TO THE MEAN LEVEL OF THE HIGHEST GABLE OR SLOPE OF A HIP ROOF. (SEE ARCHITECTURAL PLANS FOR DETAILS)

**WAIVER REQUESTED

WAIVER REQUESTS:

THE FOLLOWING WAIVERS ARE REQUESTED FROM THE CITY OF AMESBURY'S ZONING REGULATIONS UNDER THE HISTORIC PRESERVATION SPECIAL PERMIT SECTION XI.J:

IN ORDER TO PERMIT CONVERSION OF EXISTING HISTORIC BUILDINGS OR STRUCTURES, THE BOARD MAY MODIFY THE STANDARDS IN TABLE OF DENSITY AND DIMENSIONAL REGULATIONS, WITH REGARDS TO MINIMUM LOT AREA, LOT FRONTAGE, FRONT, SIDE AND REAR SETBACKS TO ALLOW RESIDENTIAL USES IN AN EXISTING OR PROPOSED PRINCIPAL OR ACCESSORY STRUCTURE.

1) SECTION VI DIMENSIONAL AND DENSITY REGULATIONS:
THE MINIMUM LOT AREA WITHIN THE R-40 DISTRICT IS 40,000 S.F., THE EXISTING LOT AREA IS 27,332 S.F.

2) SECTION VI DIMENSIONAL AND DENSITY REGULATIONS:
THE MINIMUM LOT FRONTAGE WITHIN THE R-40 DISTRICT IS 140 FT., THE EXISTING LOT HAS 132.84 FT. OF FRONTAGE.

3) SECTION VI DIMENSIONAL AND DENSITY REGULATIONS:
THE REQUIRED FRONT SETBACK WITHIN THE R-40 DISTRICT IS 40 FT., THE PROPOSED FRONT SETBACK IS 36.6 FT.

4) SECTION VI DIMENSIONAL AND DENSITY REGULATIONS:
THE REQUIRED SIDE SETBACK WITHIN THE R-40 DISTRICT IS 25 FT., THE PROPOSED SIDE SETBACK IS 17.2 FT.

5) SECTION VI DIMENSIONAL AND DENSITY REGULATIONS:
THE REQUIRED REAR SETBACK WITHIN THE R-40 DISTRICT IS 50 FT., THE PROPOSED REAR SETBACK IS 42.6 FT.

6) SECTION VI DIMENSIONAL AND DENSITY REGULATIONS:
THE MAXIMUM BUILDING AREA WITHIN THE R-40 DISTRICT IS 15%, THE PROPOSED BUILDING AREA IS 20.5%.

7) SECTION VI DIMENSIONAL AND DENSITY REGULATIONS:
THE MAXIMUM NUMBER OF STORIES WITHIN THE R-40 DISTRICT IS 2.5, THE PROPOSED BUILDING IS 4 STORIES (INCLUDING BASEMENT/GARAGE).

8) SECTION VIII OFF STREET PARKING AND LOADING REGULATIONS:
THE REQUIRED AISLE WIDTH BETWEEN PARKING SPACES FOR TWO WAY TRAFFIC IS 24'. ONE OF THE PROPOSED PARKING SPACES PROVIDES 20'.

9) SECTION VIII OFF STREET PARKING AND LOADING REGULATIONS:
ALL DRIVEWAYS IN "R" DISTRICTS SHALL BE PLACED A MINIMUM OF 5' FROM ANY PROPERTY LINE. THE PROPOSED DRIVEWAY IS 3.5' FROM THE PROPERTY LINE.

10) WAIVER FROM SECTION 8.04A.1OF THE AMESBURY SUBDIVISION RULES AND REGULATIONS REQUIRING THE USE OF RCP PIPE FOR THE DRAINAGE SYSTEM. HDPE PIPE IS PROPOSED.

11) WAIVER FROM SECTION 8.04A.1 OF THE AMESBURY SUBDIVISION RULES AND REGULATIONS REQUIRING A MINIMUM OF 3 FEET OF COVER OVER DRAINAGE PIPES. LESS THAN 2.7 FEET OF COVER IS PROPOSED AT CB#4.

GRAPHIC SCALE
20 0 10 20 40 80
(IN FEET)
1 inch = 20'

COMMONWEALTH OF MASSACHUSETTS
JAMES T. MELLIN
CIVIL
No. 52905
REGISTERED PROFESSIONAL ENGINEER

PREPARED FOR

80 HAVERHILL ROAD, LLC
80 HAVERHILL ROAD
AMESBURY, MA

NO.	DATE	DESCRIPTION	BY

MEI
MILLENNIUM ENGINEERING, INC.
ENGINEERING AND LAND SURVEYING
62 ELM ST. SALISBURY, MA 01952 (978) 463-8980
13 HAMPTON RD. EXETER, NH 03833 (603) 778-0528

SCALE: 1"=20' CALC. BY: S.R.C.
DATE: NOV. 8, 2024 CHKD. BY: E.W.B.
PROJECT: M234276

SITE PLAN
IN
AMESBURY, MA
AT
80 HAVERHILL ROAD

COVER SHEET

SHEET: C-1

LEGEND

EXISTING	PROPOSED	
□	■CB	CATCH BASIN (OR GUTTER INLET, OR LEACHING BASIN)
	■CBCI (OR GICI)	CATCH BASIN (OR GUTTER INLET) WITH CURB INLET
		CURB (OR BERM) – TYPE NOTED
		EDGE OF ROAD
—160—	162	CONTOUR
x 7.3	100.00	SPOT GRADE
Ⓢ	Ⓢ	SEWER MANHOLE
Ⓓ	Ⓓ	DRAINAGE MANHOLE
GV		GAS GATE
WV	⋈	WATER GATE
		HYDRANT
○ FA	● FA	FIRE ALARM BOX
☼	✱	POST MOUNTED PEDESTRIAN LIGHT
		UTILITY POLE
— D —	— D —	DRAIN PIPE
— S —	— S —	SEWER MAIN
— FM —	— FM —	SEWER FORCE MAIN
— UD —	— UD —	UNDERDRAIN
— W —	— W —	WATER MAIN
	— E/T —	ELECTRIC/TELEPHONE DUCT
□ MB	■MB	MAIL BOX
		HIGHWAY GUARD (TYPE NOTED)
— x — x —	— x — x —	FENCE (SIZE AND TYPE NOTED)
		EASEMENT LINE
PL	PL	PROPERTY LINE
		100 FT BUFFER ZONE
		TEST PIT
	— SF —	SILTATION BARRIER/LIMIT OF WORK
		WETLAND

SURVEY

120	WETLAND DELINEATION FLAG
C.B.	CONCRETE BOUND
S.B.	STONE BOUND
D.H.	DRILL HOLE
PK	MASONRY NAIL
I.P.	IRON PIPE
I ROD	IRON ROD
FND.	FOUND
N/FND.	NOT FOUND
0 / 00	ASSESSORS MAP AND PARCEL

GENERAL NOTES

1. THE CONTRACTOR SHALL REPORT TO THE OWNER AND ENGINEER ANY SIGNIFICANT VARIATIONS IN EXISTING SITE CONDITIONS. ANY PROPOSED REVISIONS TO THE WORK SHALL NOT BE UNDERTAKEN UNTIL REVIEWED AND APPROVED BY THE OWNER AND REGULATING CITY AND/OR STATE AGENCIES.
2. THE CONTRACTOR SHALL INSTALL ALL SYSTEM COMPONENTS IN ACCORDANCE WITH THE MANUFACTURER'S SPECIFICATIONS AND ALL APPLICABLE ELECTRICAL, PLUMBING, AND SANITARY CODES.
3. ALL WORK SHALL CONFORM TO; THE CITY OF AMESBURY SUBDIVISION RULES AND REGULATIONS, THE CITY OF AMESBURY CONSTRUCTION STANDARDS AND DETAILS, THE WETLANDS PROTECTION ACT (310 CMR 10.00), THE ORDER OF CONDITIONS ISSUED BY THE AMESBURY CONSERVATION COMMISSION; NPDES CONSTRUCTION GENERAL PERMIT; AND THESE PLANS.
4. THE LOCATION OF ALL UTILITIES, AS SHOWN ON THESE PLANS, ARE BASED UPON PLANS AND RECORD INFORMATION PROVIDED BY MUNICIPAL AND PRIVATE UTILITY COMPANIES AND ARE CONSIDERED APPROXIMATE BOTH AS TO SIZE AND LOCATION. NO WARRANTY IS MADE AS TO THE ACCURACY OF THESE LOCATIONS OR THAT ALL UTILITIES ARE SHOWN. THE CONTRACTOR SHALL NOT RELY ON THESE PLANS FOR SUCH INFORMATION AND SHALL MAKE EXAMINATIONS IN THE FIELD BY VARIOUS AVAILABLE RECORDS, UTILITY COMPANIES AND INDIVIDUALS, AS TO THE LOCATION OF ALL SUBSURFACE STRUCTURES.
5. THE CONTRACTOR SHALL VERIFY THE LOCATION OF EXISTING UTILITIES BY CONTACTING "DIG–SAFE" AT LEAST 72 HOURS PRIOR TO ANY EXCAVATION. DIG–SAFE TELEPHONE NUMBER: 1–888–344–7233.
6. THE CONTRACTOR SHALL FIELD CHECK ALL DIMENSIONS AND ELEVATIONS BEFORE PROCEEDING WITH THE NEW WORK. HE/SHE SHALL EXCAVATE TO VERIFY PERTINENT DRAINAGE INVERTS AND POTENTIAL UTILITY CONFLICTS. ANY DISCREPANCIES SHALL BE REPORTED TO THE OWNER IMMEDIATELY.
7. ALL EXISTING STRUCTURES AND SURFACES, UNLESS OTHERWISE SHOWN, SHALL BE COMPLETELY REMOVED FROM THE AREAS OF WORK. ALL TREES SCHEDULED FOR REMOVAL SHALL BE FIELD MARKED AND APPROVED FOR REMOVAL BY THE OWNER PRIOR TO CUTTING OPERATIONS.
8. THE CONTRACTOR IS RESPONSIBLE FOR INITIATING, MAINTAINING AND SUPERVISING ALL SAFETY PRECAUTIONS AND PROGRAMS IN CONNECTION WITH THE WORK. THE CONTRACTOR SHALL TAKE ALL NECESSARY PRECAUTIONS FOR THE SAFETY OF THE PUBLIC, EMPLOYEES, AND ALL OTHER PERSONS ASSOCIATED WITH THE PROJECT. HE/SHE SHALL COORDINATE AND BE RESPONSIBLE FOR ALL SAFETY SIGNING, BARRIERS AND TEMPORARY PAVEMENT MARKINGS NECESSARY TO PROVIDE A SMOOTH AND PROPER TRANSITION FOR TRAFFIC FLOW.
9. IF REQUIRED BY THE CONTRACTOR, OVERHEAD LINES SHALL BE RELOCATED BY THE UTILITY COMPANY AT THE CONTRACTORS EXPENSE.
10. AREAS OUTSIDE THE LIMITS OF WORK (EROSION CONTROL/SILT FENCE LOCATIONS) DISTURBED BY THE CONTRACTOR DURING CONSTRUCTION SHALL BE RESTORED TO THEIR ORIGINAL CONDITION AT THE EXPENSE OF THE CONTRACTOR.
11. ALL SEWER MAINS SHALL BE INSTALLED AT LEAST 10 FEET HORIZONTALLY FROM PROPOSED WATER MAINS AND SHALL MAINTAIN 5 FEET OF COVER OVER THE TOP OF THE PIPING, UNLESS OTHERWISE SHOWN OR APPROVED.
12. ALL WATER MAINS SHALL BE INSTALLED WITH A MINIMUM OF 5 FEET OF COVER OVER THE TOP OF THE PIPE, UNLESS OTHERWISE SHOWN OR APPROVED.
13. WHENEVER SEWER MAINS MUST CROSS WATER MAINS, THE SEWER SHALL BE CONSTRUCTED AS FOLLOWS; 6" THICK CONCRETE ENCASEMENTS EXTENDING 10' EITHER SIDE OF THE CROSSING.
14. THE CONTRACTOR IS RESPONSIBLE FOR MAINTAINING EROSION AND/OR SEDIMENT CONTROLS DURING CONSTRUCTION. HE/SHE SHALL INSPECT CONTROLS WEEKLY AND AFTER ALL STORM EVENTS. REPAIRS, IF REQUIRED, SHALL BE MADE IMMEDIATELY.
15. 14 DAYS PRIOR TO COMMENCING CONSTRUCTION, THE OWNER/DEVELOPER SHALL PRESENT A CONSTRUCTION SCHEDULE TO THE THE CITY OF AMESBURY PLANNING BOARD.
16. TWO HARD COPIES OF AS–BUILT DRAWINGS SHALL BE SUBMITTED TO THE THE CITY OF AMESBURY PLANNING BOARD UPON COMPLETION OF THE PROJECT. AS–BUILTS SHALL INCLUDE ALL LANDBASE AND UTILITIES INFORMATION.
17. ONSITE BURIAL OF STUMPS OR ANY OTHER DEBRIS IS PROHIBITED.
18. ELEVATIONS ARE BASED UPON 1988 NAVD DATUM.

FOR REGISTRY USE

AMESBURY PLANNING BOARD APPROVAL

_____

_____

_____

_____

_____

_____

DATE

CITY OF AMESBURY
OFFICE OF THE CITY OF THE CLERK

THIS IS TO CERTIFY THAT ON _____ I RECEIVED FROM THE AMESBURY PLANNING BOARD CERTIFICATION OF ITS APPROVAL OF THIS PLAN AND THAT DURING THE (20) TWENTY DAYS NEXT FOLLOWING I HAVE RECEIVED NO NOTICE OF ANY APPEAL FROM SAID DECISION.

CLERK DATE

MATERIAL NOTES

ALL MATERIALS OF THE ELEMENTS IN THE SITE PLAN MUST CONFORM TO THE FOLLOWING STANDARDS:

1. COMMONWEALTH OF MASSACHUSETTS DEPARTMENT OF TRANSPORTATION STANDARD SPECIFICATIONS FOR HIGHWAYS AND BRIDGES (LATEST EDITION)
2. 521 CMR RULES AND REGULATIONS OF THE ARCHITECTURAL ACCESS BOARD (AAB) AND THE AMERICANS WITH DISABILITIES ACT (ADA)
3. SPECIFICATIONS BY THE CITY OF AMESBURY AS SET FORTH BY DESIGN STANDARDS IN THE PLANNING BOARD RULES AND REGULATIONS GOVERNING THE SUBDIVISION OF LAND, DATED NOVEMBER 1, 2013
4. UTILITIES INSTALLED PER CITY OF AMESBURY WATER DIVISION CONSTRUCTION DETAILS

PAVEMENT NOTES

1.) ALL STUMPS, ROCKS AND LEDGE WITHIN THE LIMITS OF THE PROPOSED PAVED WAY SHALL BE REMOVED. ALL LEDGE SHALL BE REMOVED TO A MINIMUM DEPTH OF 2' BELOW FINISHED PAVEMENT GRADE.
2.) PAVEMENT SHALL NOT BE CONSTRUCTED DURING FREEZING WEATHER OR ON WET OR FROZEN SUBGRADE.
3.) GRADING AND ROLLING SHALL BE REQUIRED TO PROVIDE A SMOOTH, EVEN, AND UNIFORM COMPACTED BASE WHICH IS COMPACTED TO A MINIMUM DRY DENSITY OF 95 PERCENT.
4.) ALL UNSUITABLE MATERIAL SHALL BE EXCAVATED AND REPLACED WITH SATISFACTORY MATERIAL AND BROUGHT UP TO GRADE WITH GRAVEL BORROW CONTAINING NO STONES GREATER THAN 6" DIAMETER.
5.) AT ALL TIMES DURING CONSTRUCTION, THE SUB–GRADE AND ALL DITCHES SHALL BE CONSTRUCTED AND MAINTAINED SO THAT THE TRACK WILL EFFECTIVELY BE DRAINED.
6.) THE CONTRACTOR SHALL REFER TO THE AMESBURY PLANNING BOARD RULES AND REGULATIONS GOVERNING THE SUBDIVISION OF LAND.

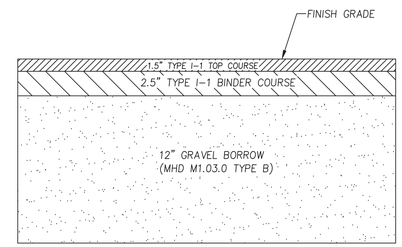

PAVEMENT DETAIL N.T.S.

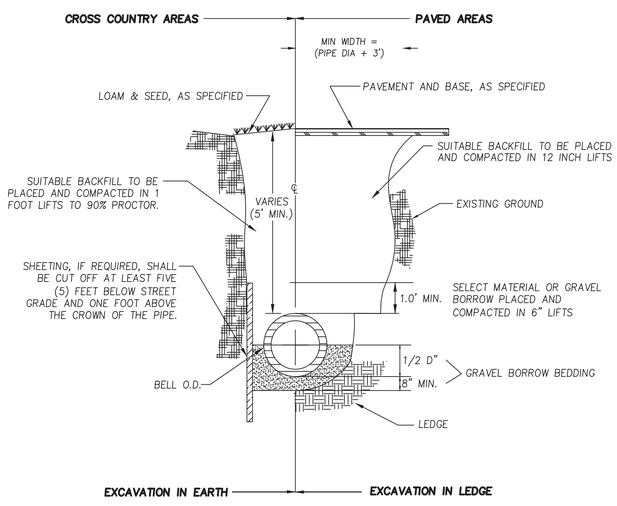

TYPICAL TRENCH DETAIL N.T.S.

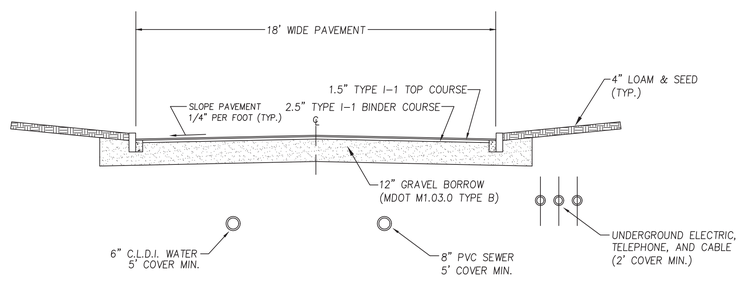

DRIVEWAY CROSS–SECTION N.T.S.

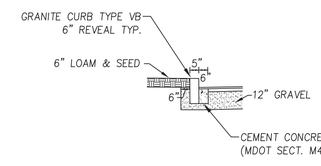

TYPICAL GRANITE CURBING INSTALLATION DETAIL N.T.S.

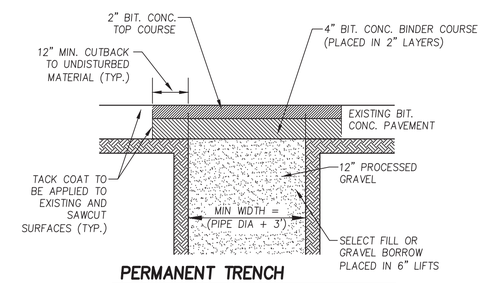

PERMANENT TRENCH PATCH DETAIL N.T.S.

GRAPHIC SCALE
20 0 10 20 40 80
(IN FEET)
1 inch = 20'

COMMONWEALTH OF MASSACHUSETTS JAMES T. MELVIN CIVIL No. 52969 PROFESSIONAL ENGINEER

PREPARED FOR
80 HAVERHILL ROAD, LLC
80 HAVERHILL ROAD
AMESBURY, MA

NO.	DATE	DESCRIPTION	BY

MEI
MILLENNIUM ENGINEERING, INC.
ENGINEERING AND LAND SURVEYING
62 ELM ST. SALISBURY, MA 01952 (978) 463–8980
13 HAMPTON RD. EXETER, NH 03833 (603) 778–0528

SCALE: 1"=20' | CALC. BY: S.R.C.
DATE: NOV. 8, 2024 | CHKD. BY: E.W.B.
PROJECT: M234276

SITE PLAN
IN
AMESBURY, MA
AT
80 HAVERHILL ROAD

GENERAL NOTES & LEGEND

SHEET: C–2

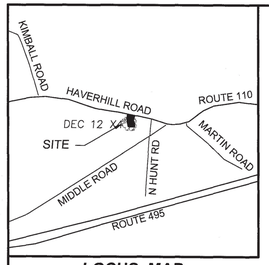

LOCUS MAP
1" = 1,500'

FOR REGISTRY USE ONLY

I CERTIFY THAT THIS PLAN CONFORMS TO THE RULES AND REGULATIONS OF THE REGISTER OF DEEDS.

PRESTON BROWN — DATE 10/30/24

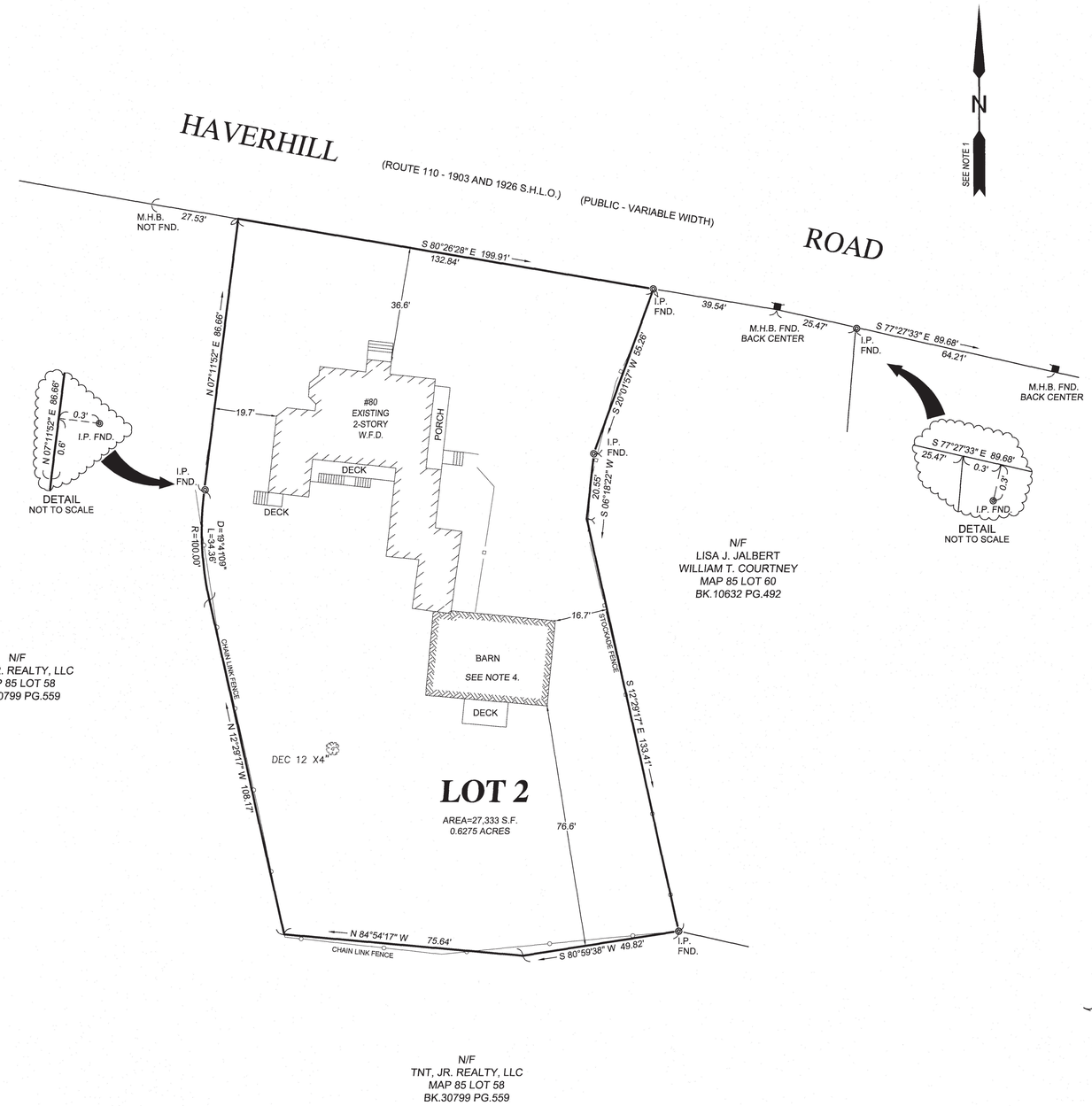

KEY REFERENCE DEEDS

1. BOOK 41666 PAGE 459 L.J.M. REAL ESTATE NOMINEE TRUST TO 80 HAVERHILL ROAD, LLC DATED 7/18/23 RECORDED SOUTH ESSEX REGISTRY OF DEEDS.

KEY REFERENCE PLANS

1. PLAN OF LAND AS SURVEYED FOR W. E. BEGIN PREPARED BY TOWN PLANNING & ENGINEERING DATED OCT. 1971 RECORDED SOUTH ESSEX REGISTRY OF DEEDS PLAN BOOK 121 PLAN 12.
2. PLAN OF LAND PREPARED FOR BALDINELLI'S BOWL-A-WAY, INC. PREPARED BY W. C. CAMMETT ENGINEERING, REVISED DATE AUGUST 19, 1992 RECORDED SOUTH ESSEX REGISTRY OF DEEDS PLAN BOOK 277 PLAN 37.
3. 1903 STATE HIGHWAY LAYOUT.
4. 1926 ALTERATION STATE HIGHWAY LAYOUT.

NOTES

1. ORIENTATION IS TO MASS MAINLAND SPC NAD 1983 BASED ON MULTIPLE GNSS RTK OBSERVATIONS.
2. STATUS OF RIGHT OF WAYS SHOWN AS PUBLIC OR PRIVATE ARE BASED ON REFERENCED DEEDS AND PLANS. NO WARRANTY IS EXPRESSED OR IMPLIED.
3. THIS SURVEY IS NOT A CERTIFICATION TO OWNERSHIP OR TITLE OF LANDS SHOWN. OWNERSHIP AND ENCUMBRANCES ARE MATTERS OF TITLE EXAMINATION NOT OF A BOUNDARY SURVEY. THE INTENT OF THIS PLAN IS TO ESTABLISH THE BOUNDARY LINES OF DEEDS REFERENCED HEREON. OWNERSHIP OF ADJOINING PROPERTIES IS ACCORDING TO ASSESSOR'S RECORDS. THIS PLAN MAY OR MAY NOT INDICATE ALL ENCUMBRANCES WHETHER EXPRESSED, IMPLIED OR PRESCRIPTIVE.
4. THE BARN AS SHOWN WAS IN PLACE AT DATE OF THE SITE DETAILS SURVEY. IT HAS SINCE BEEN RAZED.

RECORD OWNER

80 HAVERHILL ROAD, LLC

ASSESSOR REFERENCE

AMESBURY ASSESSOR'S MAP 85 LOT 59.

I CERTIFY THAT THE PROPERTY LINES SHOWN ARE THE LINES DIVIDING EXISTING OWNERSHIPS, AND THE LINES OF STREETS AND WAYS SHOWN ARE THOSE OF PUBLIC OR PRIVATE STREETS OR WAYS ALREADY ESTABLISHED, AND NO NEW LINES FOR DIVISION OF EXISTING OWNERSHIPS OR FOR NEW WAYS ARE SHOWN.

CHAPTER 41 SECTION 81X

COMMONWEALTH OF MASSACHUSETTS — MICHAEL J. SERGI No. 33191 — PROFESSIONAL LAND SURVEYOR

MICHAEL J. SERGI P.L.S. — DATE 10/30/24

THE CERTIFICATION SHOWN ABOVE IS INTENDED TO MEET REGISTRATION REQUIREMENTS AND IS NOT A CERTIFICATION TO TITLE OR OWNERSHIP OF PROPERTY SHOWN.OWNERSHIP OF ADJOINING PROPERTIES ARE ACCORDING TO ASSESSORS RECORDS.

GRAPHIC SCALE
20 0 10 20 40 80
(IN FEET)
1 inch = 20'

PREPARED FOR
80 HAVERHILL ROAD, LLC
80 HAVERHILL ROAD
AMESBURY, MA

NO.	DATE	DESCRIPTION	BY

MEI — MILLENNIUM ENGINEERING, INC.
ENGINEERING AND LAND SURVEYING
62 ELM ST. SALISBURY, MA 01952 (978) 463-8980
13 HAMPTON RD. EXETER, NH 03833 (603) 778-0528

SCALE: 1"=20' | CALC. BY: P.D.B.
DATE: OCT. 28, 2024 | CHKD. BY: M.J.S.
PROJECT: M234276

SITE PLAN
IN
AMESBURY, MA
AT
80 HAVERHILL ROAD

BOUNDARY PLAN

SHEET: C-3

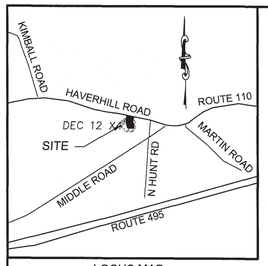

LOCUS MAP
1"=1,500'

BASIS OF BEARINGS

MASSACHUSETTS STATE PLANE
COORDINATE SYSTEM
NAD–83

OWNER OF RECORD

80 HAVERHILL ROAD, LLC
BK. 41666 PG. 459

PLAN REFERENCES

PLAN BOOK 121 PLAN 12
1926 S.H.L.O.

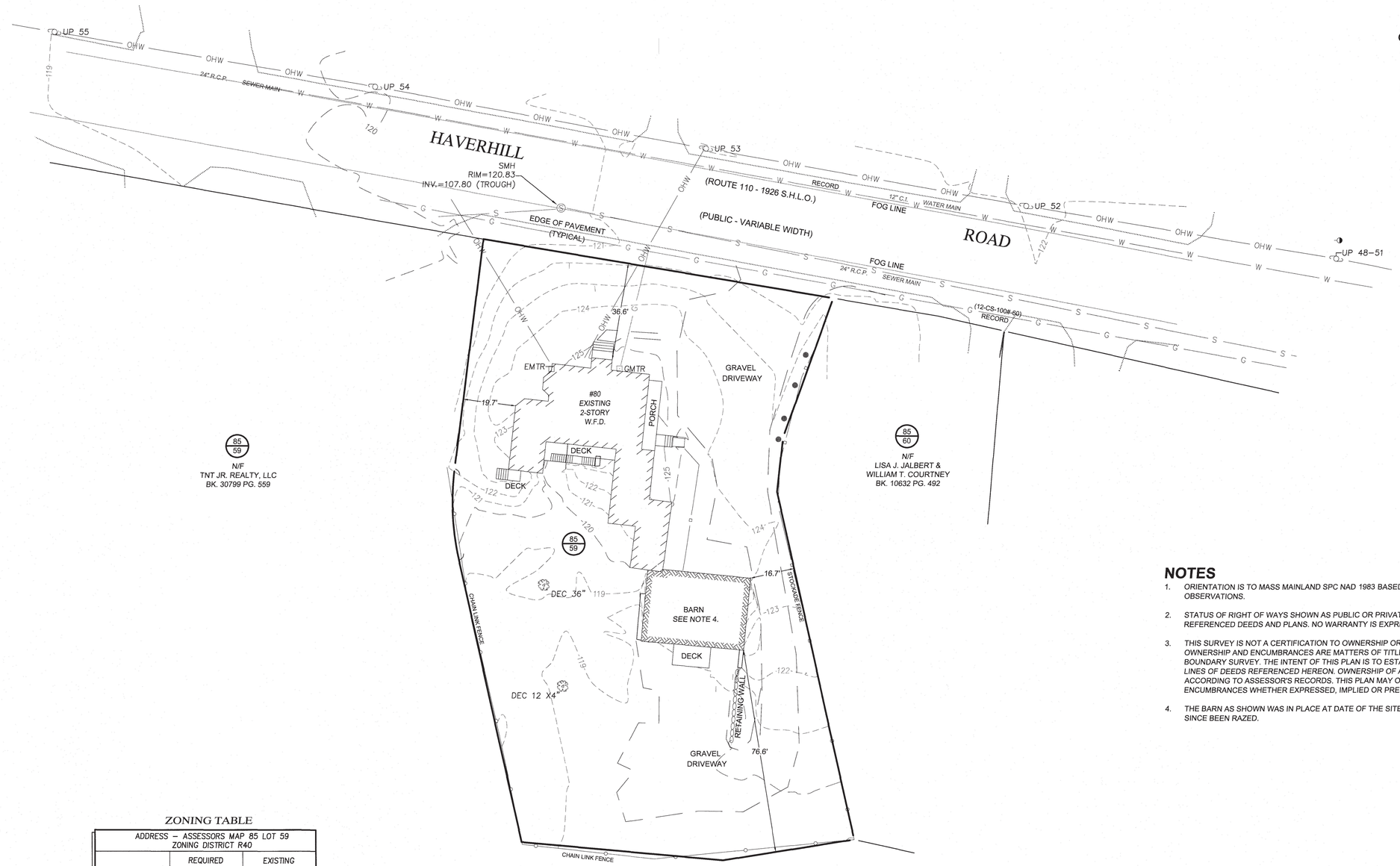

NOTES

1. ORIENTATION IS TO MASS MAINLAND SPC NAD 1983 BASED ON MULTIPLE GNSS RTK OBSERVATIONS.
2. STATUS OF RIGHT OF WAYS SHOWN AS PUBLIC OR PRIVATE ARE BASED ON REFERENCED DEEDS AND PLANS. NO WARRANTY IS EXPRESSED OR IMPLIED.
3. THIS SURVEY IS NOT A CERTIFICATION TO OWNERSHIP OR TITLE OF LANDS SHOWN. OWNERSHIP AND ENCUMBRANCES ARE MATTERS OF TITLE EXAMINATION NOT OF A BOUNDARY SURVEY. THE INTENT OF THIS PLAN IS TO ESTABLISH THE BOUNDARY LINES OF DEEDS REFERENCED HEREON. OWNERSHIP OF ADJOINING PROPERTIES IS ACCORDING TO ASSESSOR'S RECORDS. THIS PLAN MAY OR MAY NOT INDICATE ALL ENCUMBRANCES WHETHER EXPRESSED, IMPLIED OR PRESCRIPTIVE.
4. THE BARN AS SHOWN WAS IN PLACE AT DATE OF THE SITE DETAILS SURVEY. IT HAS SINCE BEEN RAZED.

ZONING TABLE

ADDRESS – ASSESSORS MAP 85 LOT 59 ZONING DISTRICT R40		
	REQUIRED	EXISTING
LOT AREA:	40,000 S.F.	27,332 S.F.
LOT FRONTAGE:	140 FT.	132.84 FT.
FRONT SETBACK:	40 FT.	36.6 FT.
SIDE SETBACK:	25 FT.	16.7 FT.
REAR SETBACK:	50 FT.	76.6 FT.
BLDG HEIGHT:	35 FT.	**
MAX. STORIES	2.5	2
MAX. BLDG AREA:	15%	13.5%
MIN OPEN SPACE:	50%	61.5%

LEGEND

S.H.L.O.	STATE HIGHWAY LAYOUT
—120—	EXISTING ELEVATION CONTOUR
UPOLE	UTILITY POLE
—OHW—	OVERHEAD WIRE
SMH	SEWER MANHOLE
—W—	WATER
—S—	SEWER
—G—	GAS
N/F	NOW OR FORMERLY
0/00	ASSESSORS MAP# PARCEL#

UTILITY NOTES

1. THE LOCATION OF ALL UNDERGROUND UTILITIES SHOWN HEREON ARE APPROXIMATE AND ARE BASED ON A COMBINATION OF READILY OBSERVABLE FIELD LOCATIONS AND COMPILED INFORMATION FROM PLANS SUPPLIED BY VARIOUS UTILITY COMPANIES, THE CLIENT AND GOVERNMENT AGENCIES. THERE IS NO GUARANTEE THAT ALL UTILITIES ARE SHOWN. IN ACCORDANCE WITH RSA 374 NOTIFY DIG–SAFE 811 BEFORE ANY EXCAVATION.

GRAPHIC SCALE
20 0 10 20 40 80
(IN FEET)
1 inch = 20'

COMMONWEALTH OF MASSACHUSETTS
MICHAEL J. SEROSI
No. 23191
PROFESSIONAL LAND SURVEYOR

PREPARED FOR

80 HAVERHILL ROAD, LLC
80 HAVERHILL ROAD
AMESBURY, MA

NO.	DATE	DESCRIPTION	BY

MEI
MILLENNIUM ENGINEERING, INC.
ENGINEERING AND LAND SURVEYING
62 ELM ST. SALISBURY, MA 01952 (978) 463–8980
13 HAMPTON RD. EXETER, NH 03833 (603) 778–0528

SCALE: 1"=20' | CALC. BY: P.D.B.
DATE: OCT. 28, 2024 | CHKD. BY: M.J.S.
PROJECT: M234276

SITE PLAN
IN
AMESBURY, MA
AT
80 HAVERHILL ROAD

EXISTING CONDITIONS

SHEET: C–4

PARKING REQUIREMENTS

FOR DWELLING OR APARTMENT HOUSE USE, 1.5 SPACES PER DWELLING OR APARTMENT UNIT ARE REQUIRED.
(SECTION VIII. TABLE OF OFF-STREET PARKING REGULATIONS)

TOTAL NUMBER OF UNITS=8

8 UNITS X 1.5 PARKING SPACES PER UNIT = 12 SPACES REQUIRED

TOTAL NUMBER OF PARKING SPACES PROVIDED = 16 SPACES

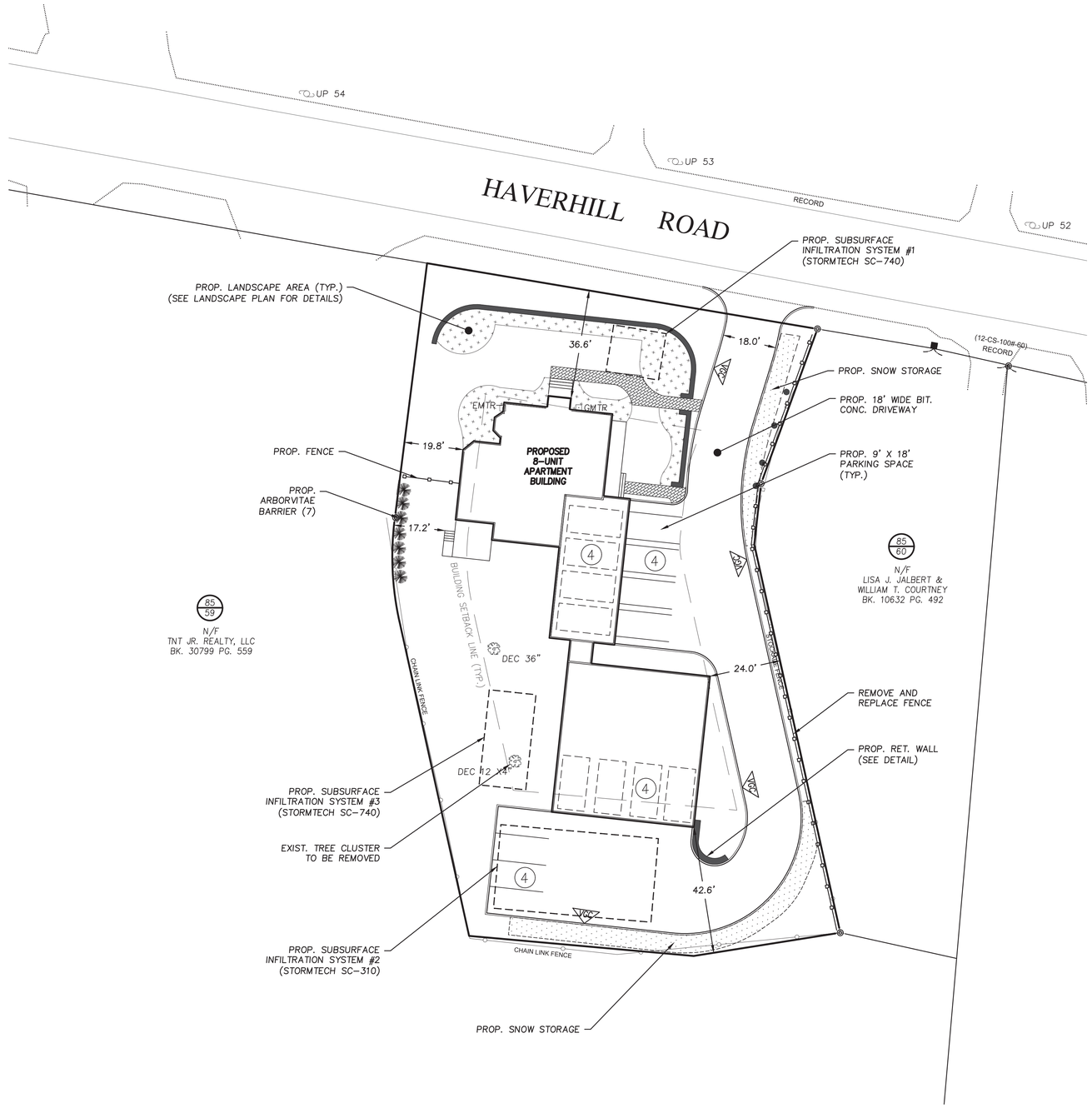

FOR REGISTRY USE

AMESBURY PLANNING BOARD APPROVAL

DATE

CITY OF AMESBURY
OFFICE OF THE CITY OF THE CLERK

THIS IS TO CERTIFY THAT ON _____
I RECEIVED FROM THE AMESBURY PLANNING BOARD CERTIFICATION OF ITS APPROVAL OF THIS PLAN AND THAT DURING THE (20) TWENTY DAYS NEXT FOLLOWING I HAVE RECEIVED NO NOTICE OF ANY APPEAL FROM SAID DECISION.

CLERK DATE

GRAPHIC SCALE
20 0 10 20 40 80
(IN FEET)
1 inch = 20'

COMMONWEALTH OF MASSACHUSETTS
JAMES T. MELVIN
CIVIL
No. 52965
SEALED
PROFESSIONAL ENGINEER

PREPARED FOR

80 HAVERHILL ROAD, LLC
80 HAVERHILL ROAD
AMESBURY, MA

NO.	DATE	DESCRIPTION	BY

MEI
MILLENNIUM ENGINEERING, INC.
ENGINEERING AND LAND SURVEYING
62 ELM ST. SALISBURY, MA 01952 (978) 463-8980
13 HAMPTON RD. EXETER, NH 03833 (603) 778-0528

SCALE: 1"=20'
DATE: NOV. 8, 2024
CALC. BY: S.R.C.
CHKD. BY: E.W.B.
PROJECT: M234276

SITE PLAN
IN
AMESBURY, MA
AT
80 HAVERHILL ROAD

SITE PLAN

SHEET: C-5

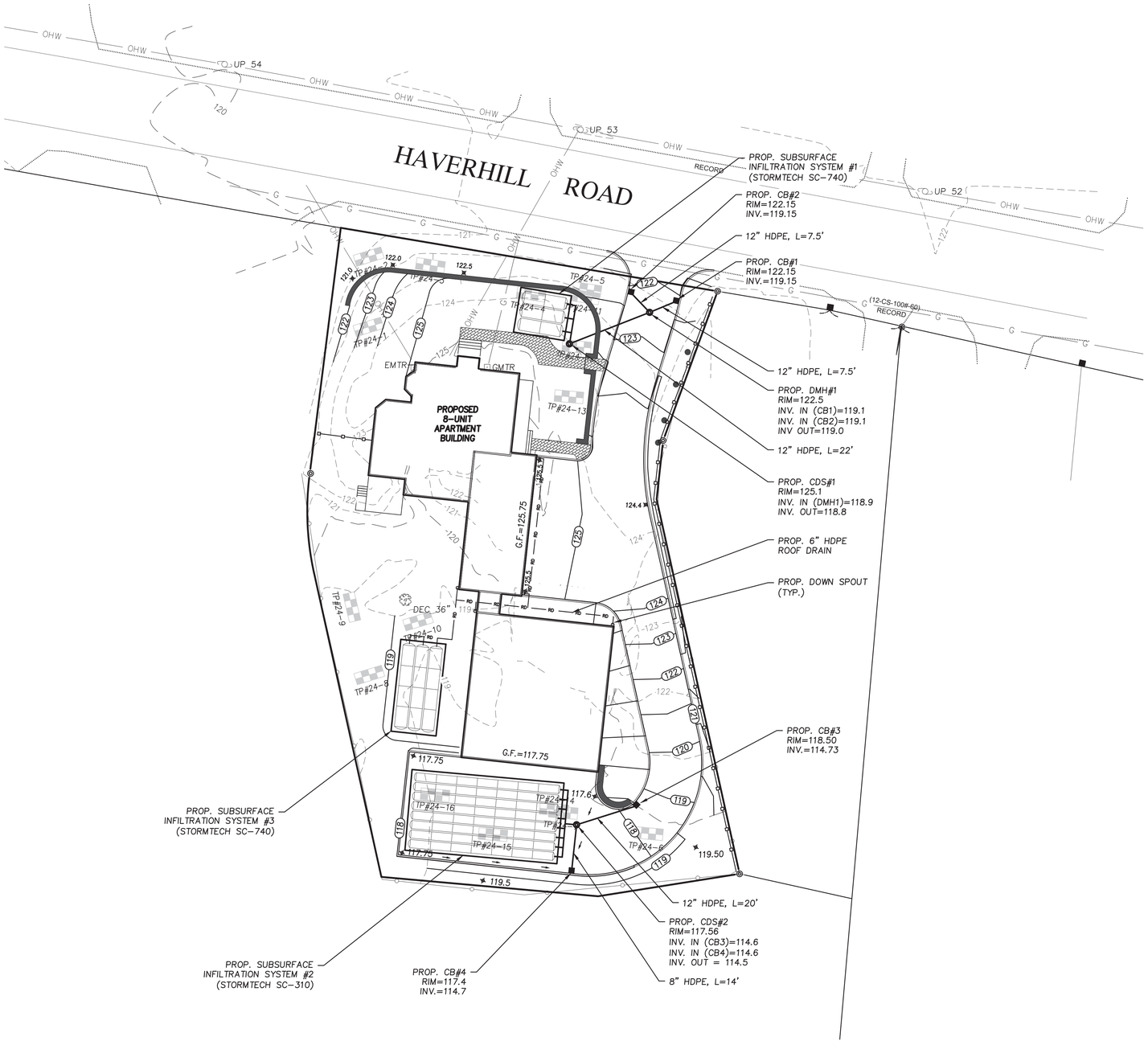

FOR REGISTRY USE

AMESBURY PLANNING BOARD APPROVAL

_____

_____

_____

_____

_____

_____

DATE

CITY OF AMESBURY
OFFICE OF THE CITY OF THE CLERK

THIS IS TO CERTIFY THAT ON _____ I RECEIVED FROM THE AMESBURY PLANNING BOARD CERTIFICATION OF ITS APPROVAL OF THIS PLAN AND THAT DURING THE (20) TWENTY DAYS NEXT FOLLOWING I HAVE RECEIVED NO NOTICE OF ANY APPEAL FROM SAID DECISION.

CLERK DATE

GRAPHIC SCALE

20 0 10 20 40 80

(IN FEET)
1 inch = 20'

COMMONWEALTH OF MASSACHUSETTS
JAMES T. MELVIN
CIVIL
No. 52965
REGISTERED PROFESSIONAL ENGINEER

PREPARED FOR

80 HAVERHILL ROAD, LLC
80 HAVERHILL ROAD
AMESBURY, MA

NO.	DATE	DESCRIPTION	BY

MEI
MILLENNIUM ENGINEERING, INC.
ENGINEERING AND LAND SURVEYING
62 ELM ST. SALISBURY, MA 01952 (978) 463-8980
13 HAMPTON RD. EXETER, NH 03833 (603) 778-0528

SCALE: 1"=20' | CALC. BY: S.R.C.
DATE: NOV. 8, 2024 | CHKD. BY: E.W.B. | PROJECT: M234276

SITE PLAN
IN
AMESBURY, MA
AT
80 HAVERHILL ROAD

GRADING & DRAINAGE PLAN

SHEET: C-6

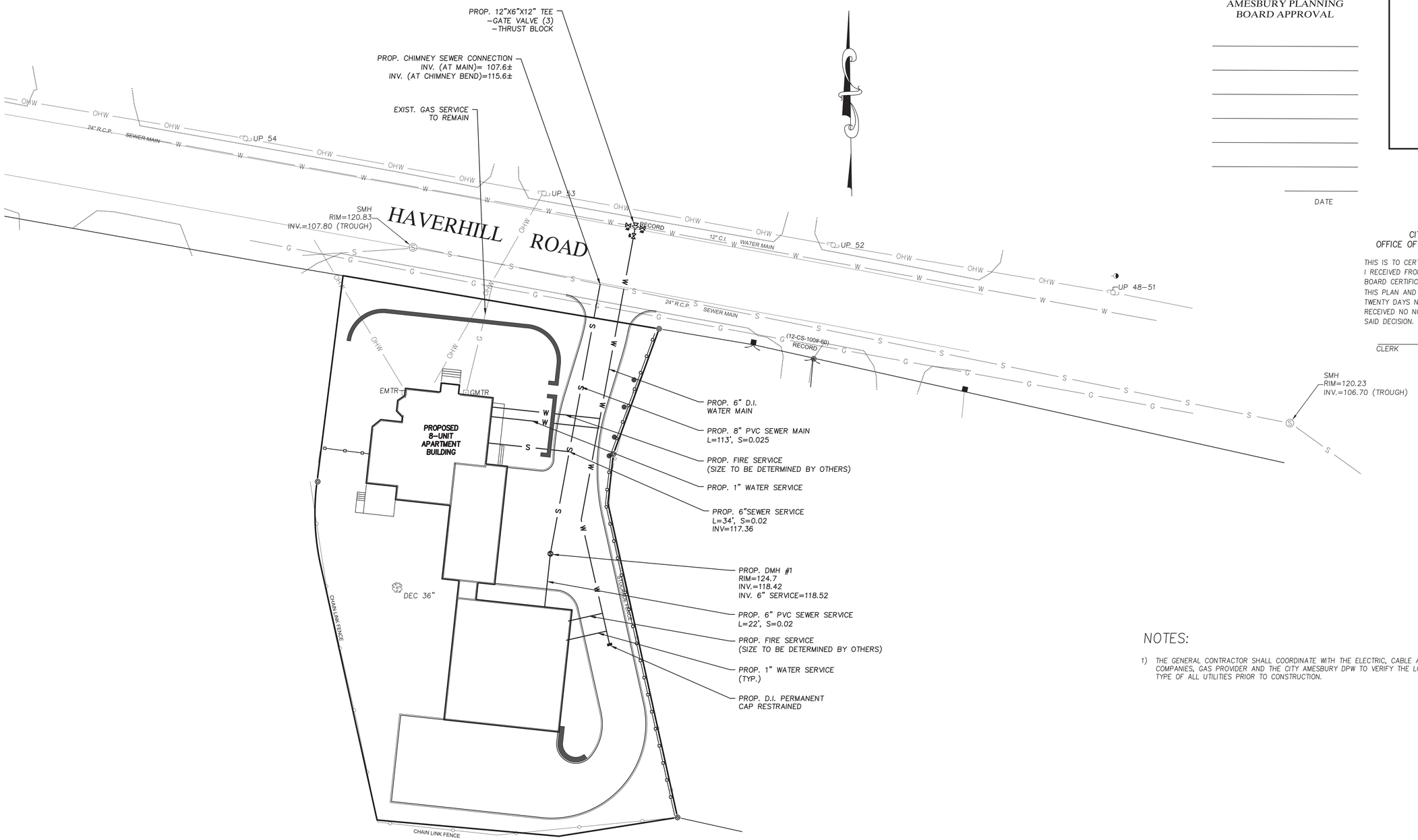

AMESBURY PLANNING
BOARD APPROVAL

DATE

FOR REGISTRY USE

CITY OF AMESBURY
OFFICE OF THE CITY OF THE CLERK

THIS IS TO CERTIFY THAT ON _____
I RECEIVED FROM THE AMESBURY PLANNING BOARD CERTIFICATION OF ITS APPROVAL OF THIS PLAN AND THAT DURING THE (20) TWENTY DAYS NEXT FOLLOWING I HAVE RECEIVED NO NOTICE OF ANY APPEAL FROM SAID DECISION.

CLERK DATE

NOTES:

1) THE GENERAL CONTRACTOR SHALL COORDINATE WITH THE ELECTRIC, CABLE AND TELEPHONE COMPANIES, GAS PROVIDER AND THE CITY AMESBURY DPW TO VERIFY THE LOCATION, SIZE AND TYPE OF ALL UTILITIES PRIOR TO CONSTRUCTION.

GRAPHIC SCALE
20 0 10 20 40 80
(IN FEET)
1 inch = 20'

COMMONWEALTH OF MASSACHUSETTS
JAMES T. MELVIN
CIVIL
No. 52965
REGISTERED PROFESSIONAL ENGINEER

PREPARED FOR

80 HAVERHILL ROAD, LLC
80 HAVERHILL ROAD
AMESBURY, MA

NO.	DATE	DESCRIPTION	BY

MEI
MILLENNIUM ENGINEERING, INC.
ENGINEERING AND LAND SURVEYING
62 ELM ST. SALISBURY, MA 01952 (978) 463–8980
13 HAMPTON RD. EXETER, NH 03833 (603) 778–0528

SCALE: 1"=20' | CALC. BY: S.R.C.
DATE: NOV. 8, 2024 | CHKD. BY: E.W.B.
PROJECT: M234276

SITE PLAN
IN
AMESBURY, MA
AT
80 HAVERHILL ROAD

UTILITIES
PLAN

SHEET: C–7

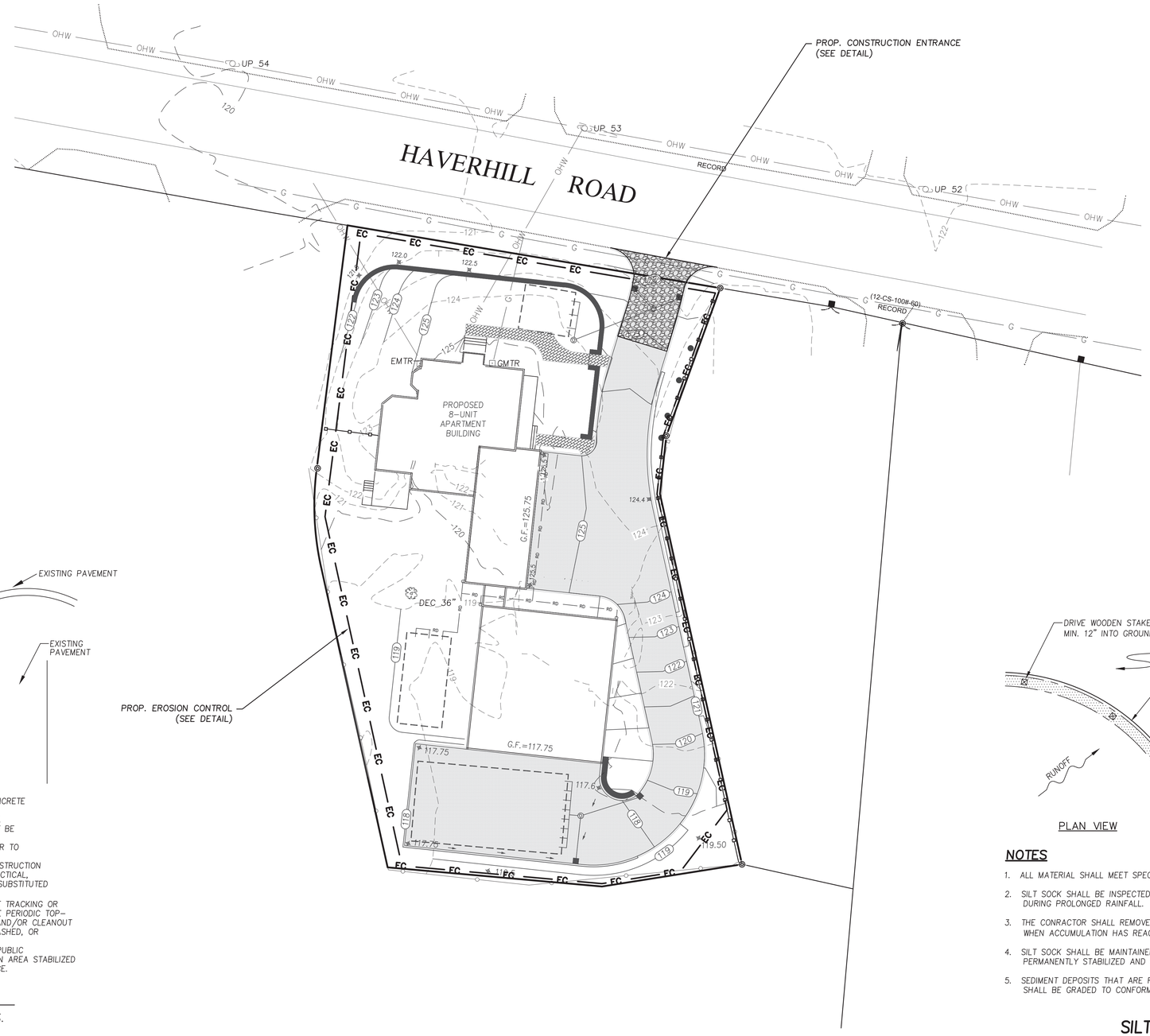

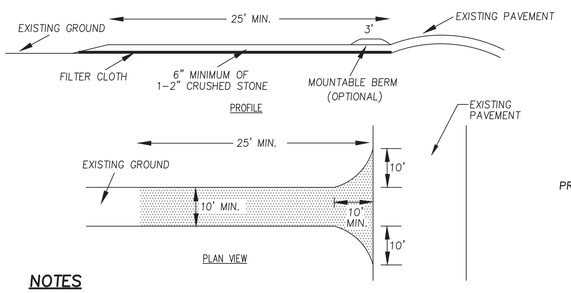

NOTES

1. STONE SHALL BE 1-1/2"-2" STONE, RECLAIMED STONE, OR RECYCLED CONCRETE EQUIVALENT.
2. THE LENGTH OF THE STABILIZED ENTRANCE SHALL NOT BE LESS THAN 25'.
3. THE THICKNESS OF THE STONE FOR THE STABILIZED ENTRANCE SHALL NOT BE LESS THAN 6".
4. GEOTEXTILE FILTER CLOTH SHALL BE PLACED OVER THE ENTIRE AREA PRIOR TO PLACING THE STONE.
5. ALL SURFACE WATER THAT IS FLOWING TO OR DIVERTED TOWARD THE CONSTRUCTION ENTRANCE SHALL BE PIPED BENEATH THE ENTRANCE. IF PIPING IS IMPRACTICAL, A BERM WITH 5:1 SLOPES THAT CAN BE CROSSED BY VEHICLES MAY BE SUBSTITUTED FOR THE PIPE.
6. THE ENTRANCE SHALL BE MAINTAINED IN A CONDITION THAT WILL PREVENT TRACKING OR FLOWING OF SEDIMENT ONTO PUBLIC RIGHTS-OF-WAY. THIS MAY REQUIRE PERIODIC TOP-DRESSING WITH ADDITIONAL STONE AS CONDITIONS DEMAND AND REPAIR AND/OR CLEANOUT OF ANY MEASURES USED TO TRAP SEDIMENT. ALL SEDIMENT SPILLED, WASHED, OR TRACKED ONTO PUBLIC RIGHTS-OF-WAY MUST BE REMOVED PROMPTLY.
7. WHEELS SHALL BE CLEANED TO REMOVE MUD PRIOR TO ENTRANCE ONTO PUBLIC RIGHTS-OF-WAY. WHEN WASHING IS REQUIRED, IT SHALL BE DONE ON AN AREA STABILIZED WITH STONE WHICH DRAINS INTO AN APPROVED SEDIMENT TRAPPING DEVICE.

STABILIZED CONSTRUCTION ENTRANCE

N.T.S.

FOR REGISTRY USE

AMESBURY PLANNING BOARD APPROVAL

DATE

CITY OF AMESBURY
OFFICE OF THE CITY OF THE CLERK

THIS IS TO CERTIFY THAT ON _____ I RECEIVED FROM THE AMESBURY PLANNING BOARD CERTIFICATION OF ITS APPROVAL OF THIS PLAN AND THAT DURING THE (20) TWENTY DAYS NEXT FOLLOWING I HAVE RECEIVED NO NOTICE OF ANY APPEAL FROM SAID DECISION.

CLERK DATE

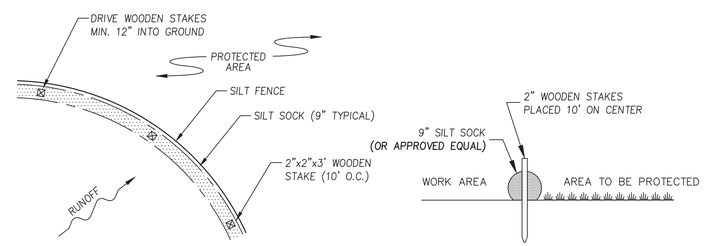

NOTES

1. ALL MATERIAL SHALL MEET SPECIFICATIONS BY FILTREXX OR APPROVED EQUAL.
2. SILT SOCK SHALL BE INSPECTED WITHIN 24 HOURS AFTER EACH RAINFALL AND AT LEAST DAILY DURING PROLONGED RAINFALL. ANY REPAIRS THAT ARE REQUIRED SHALL BE MADE IMMEDIATELY.
3. THE CONRACTOR SHALL REMOVE SEDIMENT AT THE BASE OF THE UPSLOPE SIDE OF THE SILT SOCK WHEN ACCUMULATION HAS REACHED 1/2 OF THE EFECTIVE HEIGHT OF THE SILT SOCK.
4. SILT SOCK SHALL BE MAINTAINED UNTIL DISTURBED AREA ABOVE THE DEVICE HAS BEEN PERMANENTLY STABILIZED AND CONSTRUCTION ACTIVITY HAS BEEN COMPLETED.
5. SEDIMENT DEPOSITS THAT ARE REMOVED OR LEFT IN PLACE AFTER THE SOCK HAS BEEN REMOVED SHALL BE GRADED TO CONFORM WITH THE EXISTING TOPOGRAPHY AND VEGETATED.

SILT SOCK INSTALLATION DETAIL

N.T.S.

GRAPHIC SCALE
20 0 10 20 40 80
(IN FEET)
1 inch = 20'

COMMONWEALTH OF MASSACHUSETTS
JAMES T. MELVIN
CIVIL
No. 52965
REGISTERED PROFESSIONAL ENGINEER

PREPARED FOR

80 HAVERHILL ROAD, LLC
80 HAVERHILL ROAD
AMESBURY, MA

NO.	DATE	DESCRIPTION	BY

MEI
MILLENNIUM ENGINEERING, INC.
ENGINEERING AND LAND SURVEYING
62 ELM ST. SALISBURY, MA 01952 (978) 463-8980
13 HAMPTON RD. EXETER, NH 03833 (603) 778-0528

SCALE: 1"=20'	CALC. BY: S.R.C.	PROJECT: M234276
DATE: NOV. 8, 2024	CHKD. BY: E.W.B.	

SITE PLAN
IN
AMESBURY, MA
AT
80 HAVERHILL ROAD

EROSION & SEDIMENTATION CONTROL PLAN

SHEET: C-8

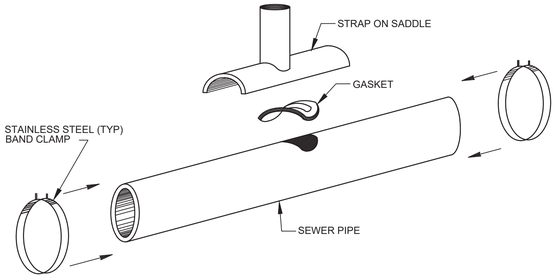

SADDLE CONNECTION - PLAN
NOT TO SCALE

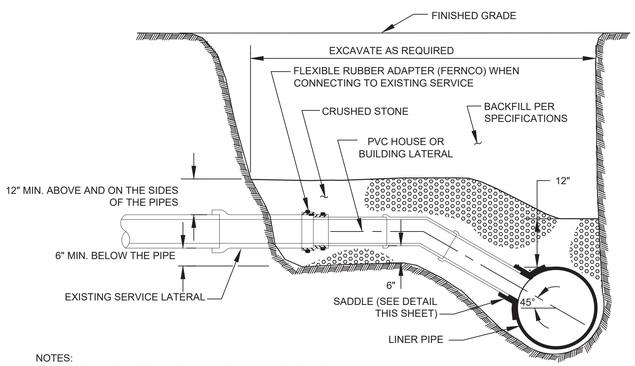

NOTES:
1. REPLACE EXISTING SERVICE LINE TO EXTENT SHOWN ON PLAN/PROFILES AND AS SPECIFIED.

SADDLE CONNECTION - SECTION
NOT TO SCALE

SADDLE CONNECTION DETAIL

N.T.S.

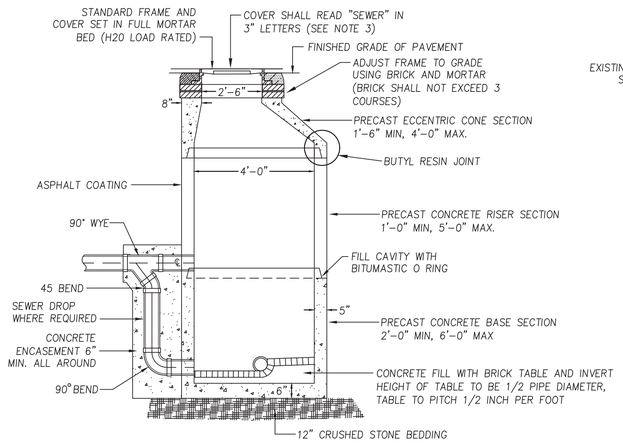

NOTES:
1) SEWER MANHOLES SHALL CONFORM TO ASTM C478 AND ASTM C185
2) STEEL REINFORCED COPOLYMER POLYPROPYLENE PLASTIC STEPS SHALL CONFORM TO LATEST ASTM C478 SPEC.
3) COVER SHALL BE LEBARON FOUNDRY (MODEL NO. LA246), MECHANICS IRON FOUNDRY, NEEHAN FOUNDRY, OR EQUAL.
4) ALL PENETRATIONS IN THE MANHOLE FOR INSERTION OF PIPING SHALL BE SEALED WITH KOR-N-SEAL FLEXIBLE PIPE CONNECTION.
5) FLAT TOP STRUCTURES SHALL BE PRECAST SECTIONS AND HAVE A 28 DAY COMPRESSIVE STRENGTH OF 5000 PSI REINFORCED FOR AASHTO H-20 LOADING.
6) CONICAL SECTIONS MAY BE SUBSTITUTED FOR FLAT-TOP STRUCTURES IN AREAS WHERE MORE THAN 4 FEET OF COVER IS PROVIDED FOR DRAIN PIPE.

PRECAST SEWER DETAIL

N.T.S.

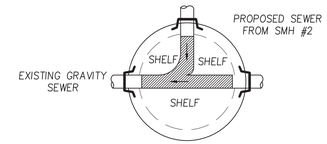

SMH #1 PLAN VIEW

CITY OF AMESBURY
OFFICE OF THE CITY OF THE CLERK

THIS IS TO CERTIFY THAT ON _____ I RECEIVED FROM THE AMESBURY PLANNING BOARD CERTIFICATION OF ITS APPROVAL OF THIS PLAN AND THAT DURING THE (20) TWENTY DAYS NEXT FOLLOWING I HAVE RECEIVED NO NOTICE OF ANY APPEAL FROM SAID DECISION.

CLERK _____ DATE _____

FOR REGISTRY USE

AMESBURY PLANNING BOARD APPROVAL

_____

_____

_____

_____

_____

_____ DATE

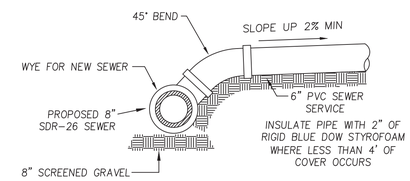

SEWER SERVICE DETAIL

N.T.S.

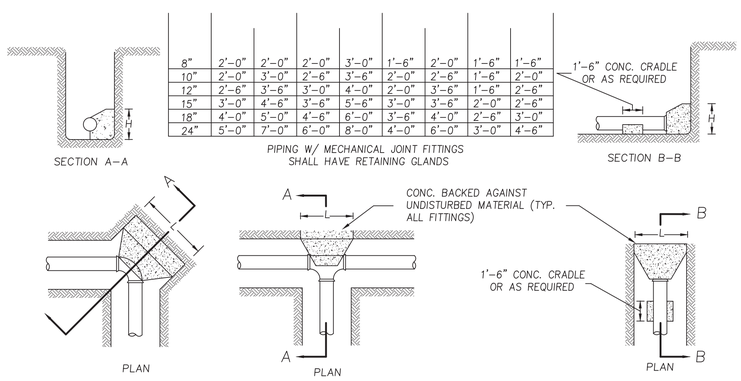

NOTES

1. VALUES SHOWN ARE FOR TEST PRESSURE OF 150 PSI WITH A 100 PSI SURGE ALLOWANCE.
2. THRUST BLOCKS SHALL NOT BE PLACED AGAINST THE FOLLOWING SOILS: PEAT, ORGANIC SILT AND ORGANIC SOILS, SOFT CLAY, RUBBISH FILL AND OTHER UNSUITABLE ARTIFICIAL FILL, SHATTERED SHALE, INORGANIC SILT AND VERY FINE SANDS.
3. POURED CONCRETE THRUST BLOCKS SHALL NOT COVER ANY JOINTS, CLAMPS, NUTS, BOLTS, ETC.

THRUST BLOCK DETAILS

N.T.S.

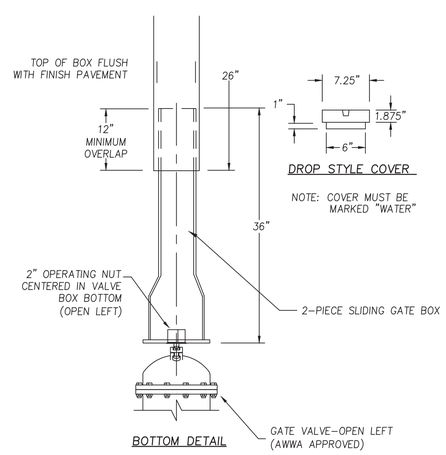

TYPICAL GATE VALVE BOX DETAIL

N.T.S.

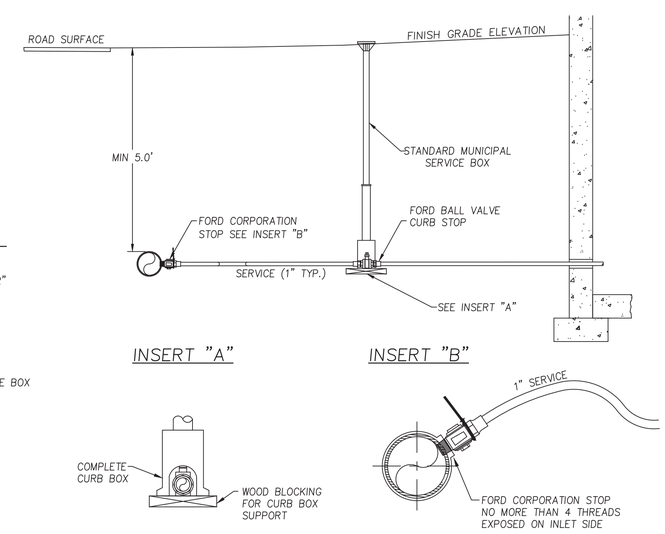

TYPICAL SERVICE CONNECTION

N.T.S.

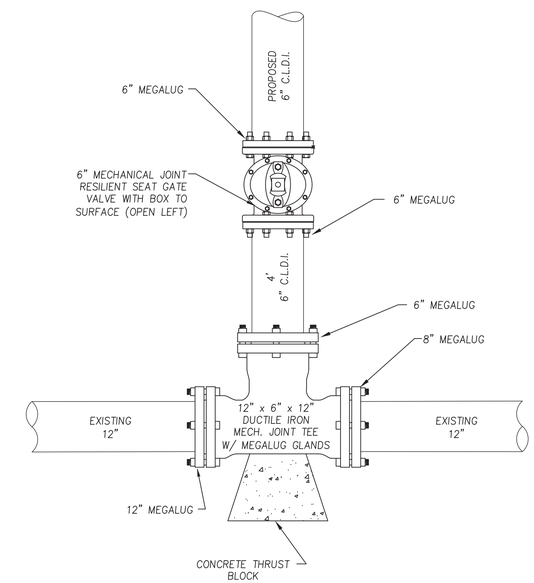

NOTES: 1) TIE IN SHALL BE COORDINATED WITH THE WATER DEPARTMENT.
2) THE CONTRACTOR IS RESPONSIBLE FOR ALL OFF-SITE NOTIFICATIONS TO IMPACTED PROPERTIES.

WATER MAIN CONNECTION DETAIL

N.T.S.

GRAPHIC SCALE
20 0 10 20 40 80
(IN FEET)
1 inch = 20'

COMMONWEALTH OF MASSACHUSETTS
JAMES T. MELVIN
CIVIL
No. 52965
REGISTERED PROFESSIONAL ENGINEER

PREPARED FOR

80 HAVERHILL ROAD, LLC
80 HAVERHILL ROAD
AMESBURY, MA

NO.	DATE	DESCRIPTION	BY

MEI
MILLENNIUM ENGINEERING, INC.
ENGINEERING AND LAND SURVEYING
62 ELM ST. SALISBURY, MA 01952 (978) 463-8980
13 HAMPTON RD. EXETER, NH 03833 (603) 778-0528

SCALE: 1"=20' | CALC. BY: S.R.C.
DATE: NOV. 8, 2024 | CHKD. BY: E.W.B.
PROJECT: M234276

SITE PLAN
IN
AMESBURY, MA
AT
80 HAVERHILL ROAD

DETAILS

SHEET: C-9

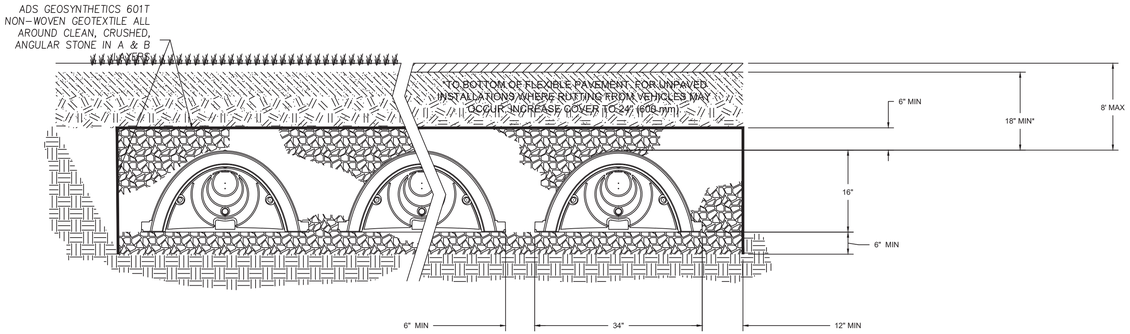

SUBSURFACE AREA	BOT. STONE ELEV.	BOT. CHAMBER ELEV.	TOP CHAMBER ELEV.	TOP STONE ELEV.	100 YR STORM ELEV.
#2	26.10	26.60	27.93	28.43	27.93

STORMTECH SC 310
INFILTRATION CHAMBER
N.T.S.

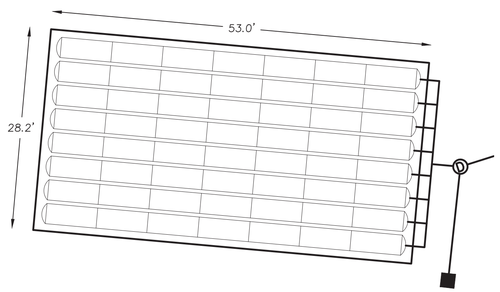

INFILTRATION SYSTEM #2

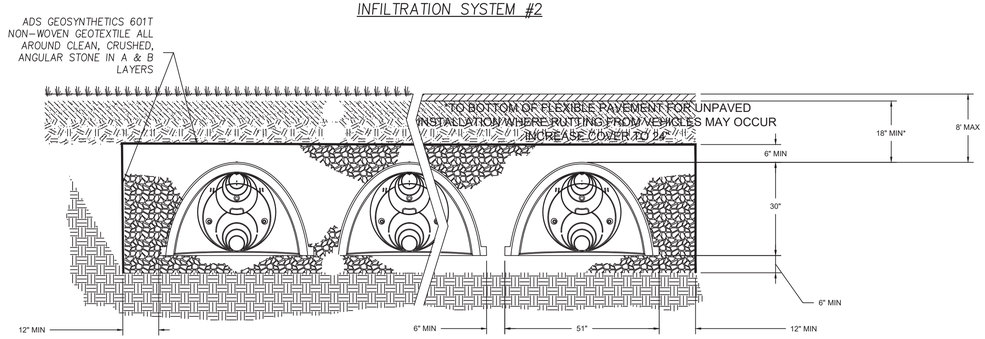

SUBSURFACE AREA	BOT. STONE ELEV.	BOT. CHAMBER ELEV.	TOP CHAMBER ELEV.	TOP STONE ELEV.	100 YR STORM ELEV.
#1	118.20	118.70	121.20	121.70	121.58
#3	114.50	115.00	117.50	118.00	117.00

STORMTECH SC 740
INFILTRATION CHAMBER
N.T.S.

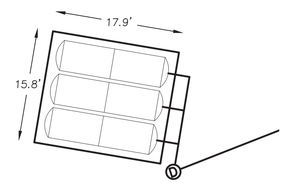

INFILTRATION SYSTEM #1

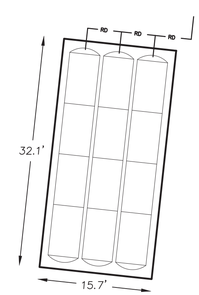

INFILTRATION SYSTEM #3

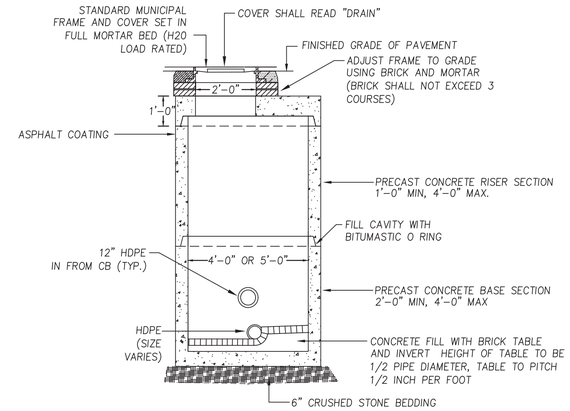

NOTES:
1) DRAIN MANHOLES SHALL CONFORM TO ASTM C478 AND ASTM C185
2) FLAT TOP STRUCTURES SHALL BE PRECAST SECTIONS AND HAVE A 28 DAY COMPRESSIVE STRENGTH OF 5000 PSI REINFORCED FOR AASHTO H-20 LOADING.
3) CONICAL SECTIONS MAY BE SUBSTITUTED FOR FLAT-TOP STRUCTURES IN AREAS WHERE MORE THAN 4 FEET OF COVER IS PROVIDED FOR DRAIN PIPE AND FOR ADDITIONAL CLEARANCE TO EXISTING UTILITIES.

PRECAST DRAIN
MANHOLE DETAIL
N.T.S.

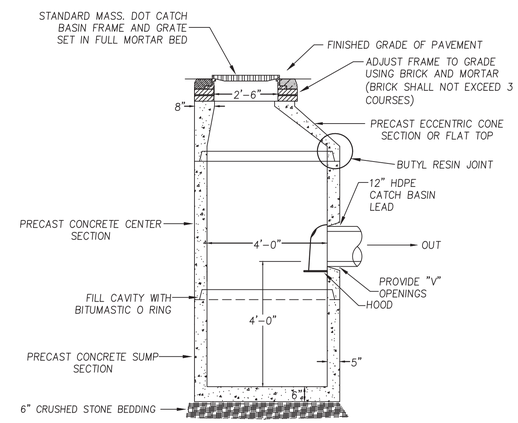

NOTES:
1) CATCH BASINS SHALL CONFORM TO ASTM C478 AND ASTM C185
2) FLAT TOP STRUCTURES SHALL BE PRECAST SECTIONS AND HAVE A 28 DAY COMPRESSIVE STRENGTH OF 5000 PSI REINFORCED FOR AASHTO H-20 LOADING.
3) CONICAL SECTIONS MAY BE SUBSTITUTED FOR FLAT-TOP STRUCTURES IN AREAS WHERE MORE THAN 4 FEET OF COVER IS PROVIDED FOR DRAIN PIPE.

PRECAST DEEP SUMP
CATCH BASIN DETAIL
N.T.S.

FOR REGISTRY USE

AMESBURY PLANNING BOARD APPROVAL

DATE

CITY OF AMESBURY
OFFICE OF THE CITY OF THE CLERK

THIS IS TO CERTIFY THAT ON _____ I RECEIVED FROM THE AMESBURY PLANNING BOARD CERTIFICATION OF ITS APPROVAL OF THIS PLAN AND THAT DURING THE (20) TWENTY DAYS NEXT FOLLOWING I HAVE RECEIVED NO NOTICE OF ANY APPEAL FROM SAID DECISION.

CLERK DATE

GRAPHIC SCALE
20 0 10 20 40 80
(IN FEET)
1 inch = 20'

COMMONWEALTH OF MASSACHUSETTS
JAMES T. MELVIN
CIVIL
No. 52965
REGISTERED PROFESSIONAL ENGINEER

PREPARED FOR
80 HAVERHILL ROAD, LLC
80 HAVERHILL ROAD
AMESBURY, MA

NO.	DATE	DESCRIPTION	BY

MEI
MILLENNIUM ENGINEERING, INC.
ENGINEERING AND LAND SURVEYING
62 ELM ST. SALISBURY, MA 01952 (978) 463-8980
13 HAMPTON RD. EXETER, NH 03833 (603) 778-0528

SCALE: 1"=20' | CALC. BY: S.R.C.
DATE: NOV. 8, 2024 | CHKD. BY: E.W.B.
PROJECT: M234276

SITE PLAN
IN
AMESBURY, MA
AT
80 HAVERHILL ROAD

DETAILS

SHEET: C-10

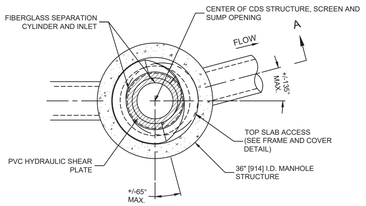

PLAN VIEW B-B
N.T.S.

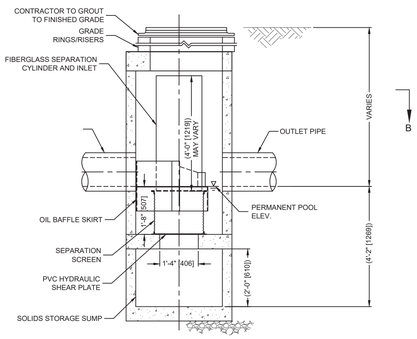

ELEVATION A-A

CONTECH CDS DETAIL

N.T.S.

FRAME AND COVER

(DIAMETER VARIES)
N.T.S.

GENERAL NOTES
1. CONTECH TO PROVIDE ALL MATERIALS UNLESS NOTED OTHERWISE.
2. DIMENSIONS MARKED WITH ( ) ARE REFERENCE DIMENSIONS. ACTUAL DIMENSIONS MAY VARY.
3. FOR FABRICATION DRAWINGS WITH DETAILED STRUCTURE DIMENSIONS AND WEIGHTS, PLEASE CONTACT YOUR CONTECH CONSTRUCTION PRODUCTS REPRESENTATIVE. www.contech-cpi.com
4. CDS WATER QUALITY STRUCTURE SHALL BE IN ACCORDANCE WITH ALL DESIGN DATA AND INFORMATION CONTAINED IN THIS DRAWING.
5. STRUCTURE SHALL MEET AASHTO HS20 AND CASTINGS SHALL MEET AASHTO M306 LOAD RATING, ASSUMING GROUNDWATER ELEVATION AT, OR BELOW, THE OUTLET PIPE INVERT ELEVATION. ENGINEER OF RECORD TO CONFIRM ACTUAL GROUNDWATER ELEVATION.
6. PVC HYDRAULIC SHEAR PLATE IS PLACED ON SHELF AT BOTTOM OF SCREEN CYLINDER. REMOVE AND REPLACE AS NECESSARY DURING MAINTENANCE CLEANING.

INSTALLATION NOTES
1. ANY SUB-BASE, BACKFILL DEPTH, AND/OR ANTI-FLOTATION PROVISIONS ARE SITE-SPECIFIC DESIGN CONSIDERATIONS AND SHALL BE SPECIFIED BY ENGINEER OF RECORD.
2. CONTRACTOR TO PROVIDE EQUIPMENT WITH SUFFICIENT LIFTING AND REACH CAPACITY TO LIFT AND SET THE CDS MANHOLE STRUCTURE (LIFTING CLUTCHES PROVIDED).
3. CONTRACTOR TO ADD JOINT SEALANT BETWEEN ALL STRUCTURE SECTIONS, AND ASSEMBLE STRUCTURE.
4. CONTRACTOR TO PROVIDE, INSTALL, AND GROUT PIPES. MATCH PIPE INVERTS WITH ELEVATIONS SHOWN.
5. CONTRACTOR TO TAKE APPROPRIATE MEASURES TO ASSURE UNIT IS WATER TIGHT, HOLDING WATER TO FLOWLINE INVERT MINIMUM. IT IS SUGGESTED THAT ALL JOINTS BELOW PIPE INVERTS ARE GROUTED.

TEST PIT#24-1
ELEV. = 123.5

0" C^ – SANDY LOAM (FILL MIXTURE) 10YR 4/1 89"

ESHWT > 89" = 116.08
PERFORMED BY ALEX PARKER
ON 8/05/23

TEST PIT#24-2
ELEV. = 121.0

0" C^ – SANDY LOAM (FILL MIXTURE) 10YR 4/4 40" 2C – LOAMY FINE SAND (GRAVELLY) 2.5YR 6/3 95"

ESHWT > 95" = 113.08
PERFORMED BY ALEX PARKER
ON 8/05/23

TEST PIT#24-3
ELEV. = 122.5

0" C^ – SANDY LOAM (FILL MIXTURE) 10YR 4/4 93"

ESHWT > 93" = 114.75
PERFORMED BY ALEX PARKER
ON 8/05/23

TEST PIT#24-4
ELEV. = 124.0

0" A – SANDY LOAM (FINE) 10YR 3/2 8" 2C – LOAMY FINE SAND (GRAVELLY) 2.5YR 6/3 85"

ESHWT > 85" = 116.91
PERFORMED BY ALEX PARKER
ON 8/05/23

TEST PIT#24-5
ELEV. = 123.0

0" A – SANDY LOAM (FINE) 10YR 3/2 8" 2C – LOAMY FINE SAND (GRAVELLY) 2.5YR 6/3 92"

ESHWT > 92" = 115.33
PERFORMED BY ALEX PARKER
ON 8/05/23

TEST PIT#24-6
ELEV. = 119.75

0" A – SANDY LOAM (FINE) 10YR 3/2 7" 2C – LOAMY FINE SAND (GRAVELLY) 2.5YR 6/3 95"

ESHWT > 95" = 111.83
PERFORMED BY ALEX PARKER
ON 8/05/23

TEST PIT#24-7
ELEV. = 119.75

0" A – SANDY LOAM (FINE) 10YR 3/2 26" 2C – LOAMY FINE SAND (GRAVELLY) 2.5YR 6/3 85"

ESHWT > 85" = 112.66
PERFORMED BY ALEX PARKER
ON 8/05/23

TEST PIT#24-8
ELEV. = 118.85

0" ^C – SANDY LOAM (FILL MIXTURE) 10YR 4/4 21" 2C – LOAMY FINE SAND 2.5YR 6/8 78"

ESHWT > 78" = 112.35
PERFORMED BY ALEX PARKER
ON 8/05/23

TEST PIT#24-9
ELEV. = 118.9

0" ^C – SANDY LOAM (FILL MIXTURE) 10YR 4/4 28" 2C – LOAMY FINE SAND 2.5YR 6/8 82"

ESHWT > 82" = 112.06
PERFORMED BY ALEX PARKER
ON 8/05/23

TEST PIT#24-10
ELEV. = 118.9

0" A – SANDY LOAM (FINE) 10YR 4/4 10" Bw – SANDY LOAM 10YR 4/6 14" 2C – LOAMY FINE SAND (GRAVELLY) 2.5YR 6/3 80"

ESHWT > 80" = 112.23
PERFORMED BY ALEX PARKER
ON 8/05/23

TEST PIT#24-11
ELEV. = 123.0

0" ^C – SANDY LOAM (FILL MIXTURE) 10YR 4/4 13" 2C – LOAMY FINE SAND (GRAVELLY) 2.5YR 6/8 129"

ESHWT = 101" = 114.58
PERFORMED BY ALEX PARKER
ON 8/05/23

TEST PIT#24-12
ELEV. = 124.0

0" ^C – SANDY LOAM (FILL MIXTURE) 10YR 4/2 15" 2C – LOAMY FINE SAND (GRAVELLY) 2.5YR 6/3 127"

ESHWT = 100" = 115.66
PERFORMED BY ALEX PARKER
ON 8/05/23

TEST PIT#24-13
ELEV. = 124.5

0" ^C – SANDY LOAM (FILL MIXTURE) 10YR 4/2 16" 2C – LOAMY FINE SAND (GRAVELLY) 2.5YR 6/3 127"

ESHWT = 110" = 116.33
PERFORMED BY ALEX PARKER
ON 8/05/23

TEST PIT#24-14
ELEV. = 119.50

0" ^C – SANDY LOAM (FILL MIXTURE) 10YR 4/2 20" 2C – LOAMY FINE SAND (GRAVELLY) 2.5YR 6/3 127"

ESHWT = 90" = 112.00
PERFORMED BY ALEX PARKER
ON 8/05/23

TEST PIT#24-15
ELEV. = 119.40

0" ^C – SANDY LOAM (FILL MIXTURE) 10YR 4/2 20" 2C – LOAMY FINE SAND (GRAVELLY) 2.5YR 6/3 127"

ESHWT = 92" = 111.73
PERFORMED BY ALEX PARKER
ON 8/05/23

TEST PIT#24-16
ELEV. = 119.00

0" ^C – SANDY LOAM (FILL MIXTURE) 10YR 4/2 28" 2C – LOAMY FINE SAND (GRAVELLY) 2.5YR 6/3 124"

ESHWT = 90" = 111.50
PERFORMED BY ALEX PARKER
ON 8/05/23

GRAPHIC SCALE
20 0 10 20 40 80
(IN FEET)
1 inch = 20'

COMMONWEALTH OF MASSACHUSETTS
JAMES T. MELVIN
CIVIL
No. 52969
PROFESSIONAL ENGINEER

PREPARED FOR
80 HAVERHILL ROAD, LLC
80 HAVERHILL ROAD
AMESBURY, MA

NO.	DATE	DESCRIPTION	BY

MEI
MILLENNIUM ENGINEERING, INC.
ENGINEERING AND LAND SURVEYING
62 ELM ST. SALISBURY, MA 01952 (978) 463-8980
13 HAMPTON RD. EXETER, NH 03833 (603) 778-0528

SCALE: 1"=20' | CALC. BY: S.R.C.
DATE: NOV. 8, 2024 | CHKD. BY: E.W.B.
PROJECT: M234276

SITE PLAN
IN
AMESBURY, MA
AT
80 HAVERHILL ROAD

DETAILS

SHEET: C-11

Attachment:

Landscape Plan

project:

80 HAVERHILL RESIDENCES

80 Haverhill Road
Amesbury, MA

architect:

GRAF
ARCHITECTS
2 Liberty Street
Newburyport, MA
01950
T. 978 499 9442
www.grafarch.com

title:

LANDSCAPE PLAN

SCALE: 1/8" = 1'-0"

23 october 2024

L01

Attachment:

Architectural Plans

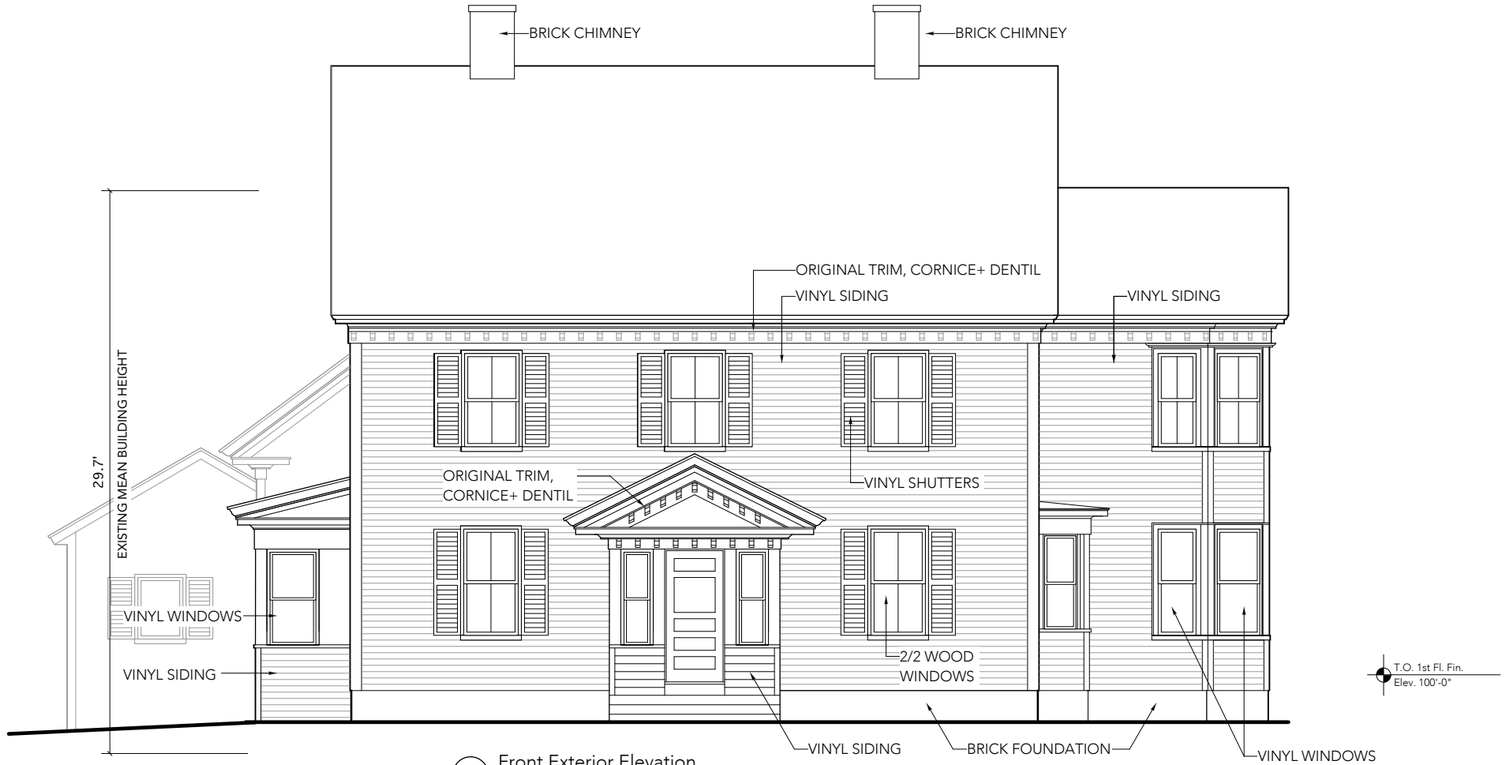

1 Front Exterior Elevation
SCALE: 1/8" = 1'-0"

2 Side Exterior Elevation
SCALE: 1/8" = 1'-0"

project:

80 HAVERHILL RESIDENCES

80 Haverhill Road
Amesbury, MA

architect:

GRAF
ARCHITECTS
2 Liberty Street
Newburyport, MA
01950
T. 978 499 9442
www.grafarch.com

title:

EXISTING Exterior Elevations

SCALE: 1/8" = 1'-0"

23 october 2024

EX1

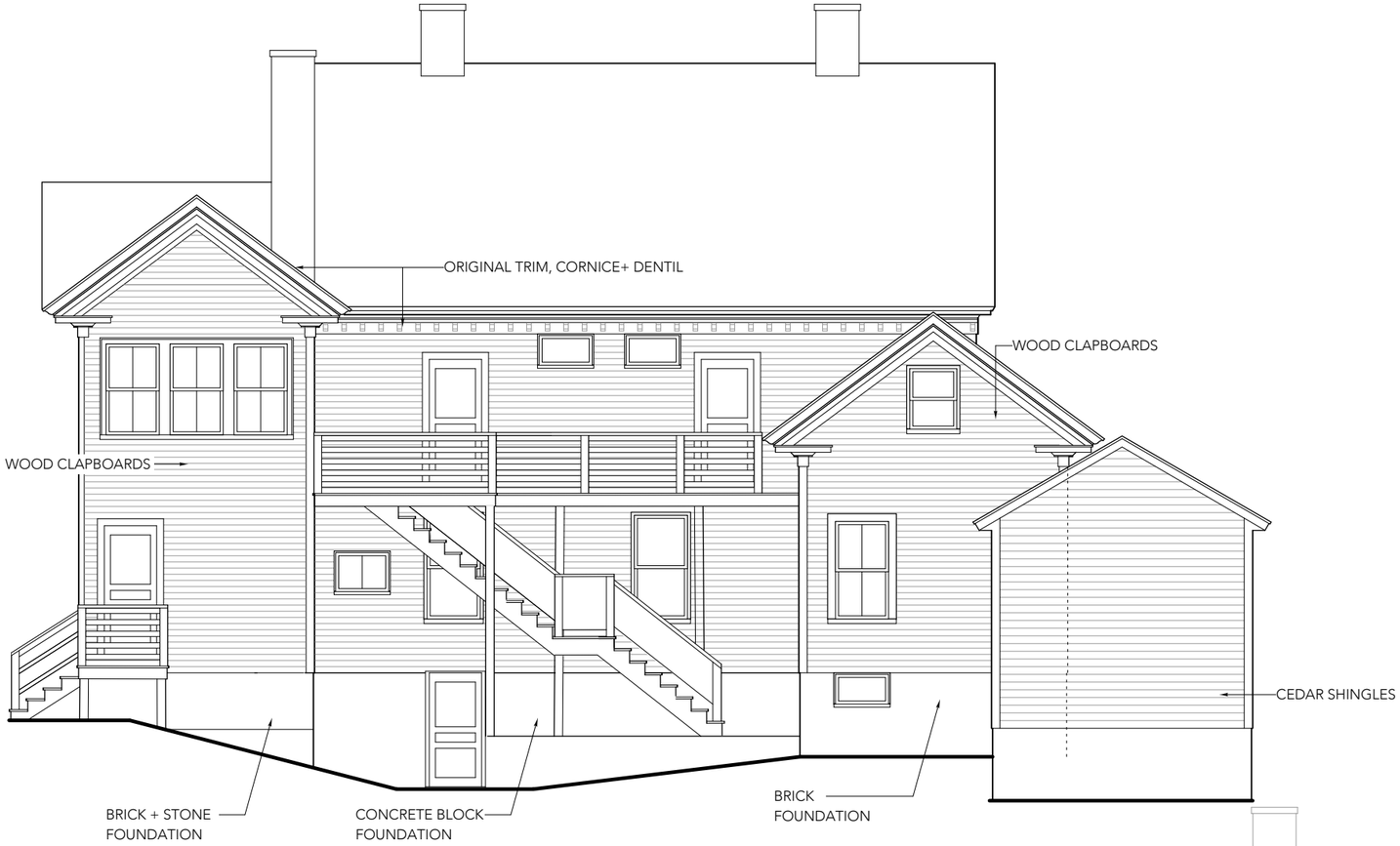

1 Front Exterior Elevation
SCALE: 1/8" = 1'-0"

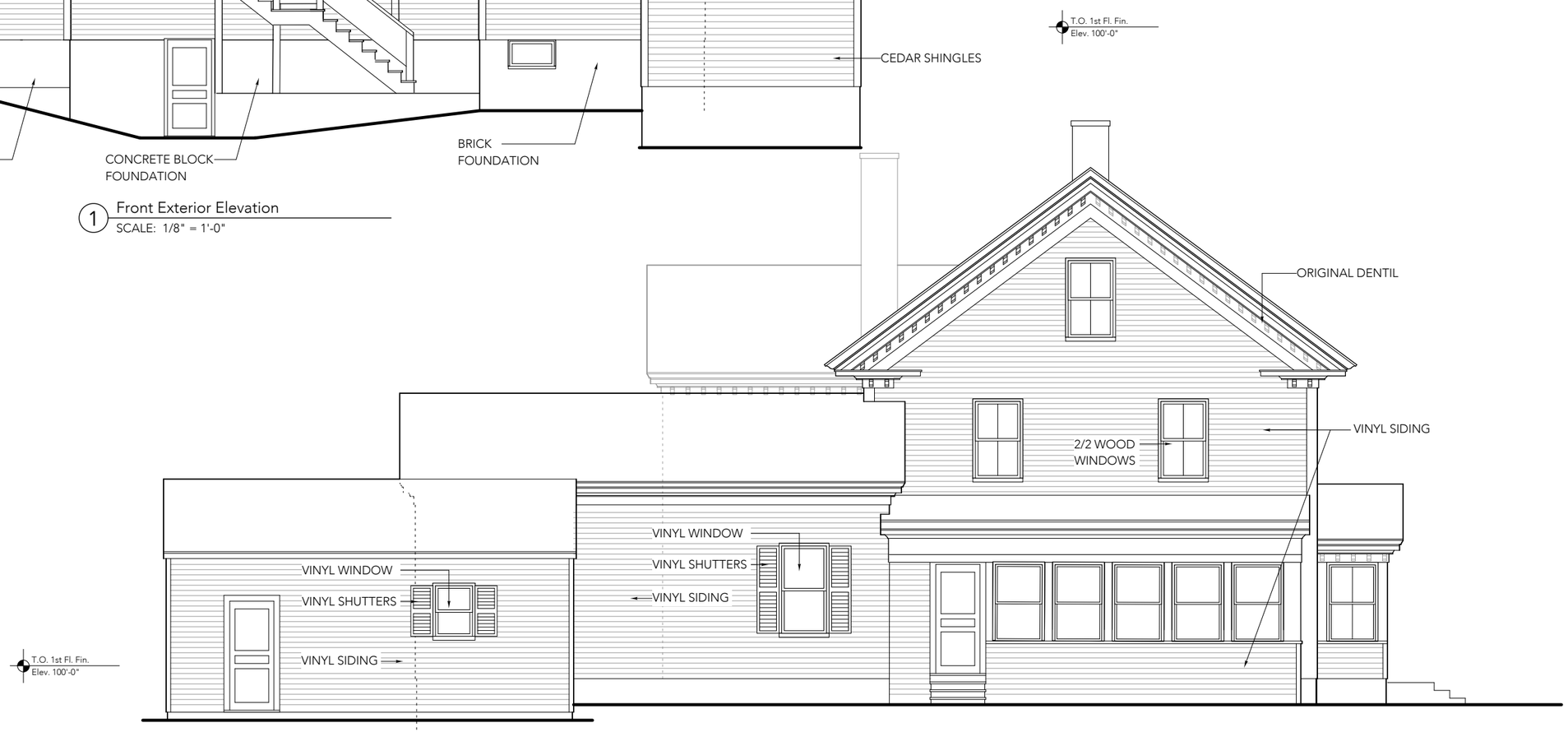

2 Side Exterior Elevation
SCALE: 1/8" = 1'-0"

project:

80 HAVERHILL RESIDENCES

80 Haverhill Road
Amesbury, MA

architect:

GRAF ARCHITECTS
2 Liberty Street
Newburyport, MA
01950
T. 978 499 9442
www.grafarch.com

title:

EXISTING Exterior Elevations

SCALE: 1/8" = 1'-0"

23 october 2024

EX2

SF CALCULATIONS - PROPOSED

UNIT 1	(2 bdrm + office)	
1ST FL		900 SF
LOWER LEVEL		321 SF
TOTAL SF		1,221 SF
UNIT 2	(2 bdrm + office)	
1ST FL		628 SF
LOWER LEVEL		673 SF
TOTAL SF		1,301 SF
UNIT 3	(2 bdrm+office)	
2ND FL		788 SF
3RD FL		321 SF
TOTAL SF		1,109 SF
UNIT 4	(2 bdrm)	
2ND FL		704 SF
3RD FL		326 SF
TOTAL SF		1,030 SF

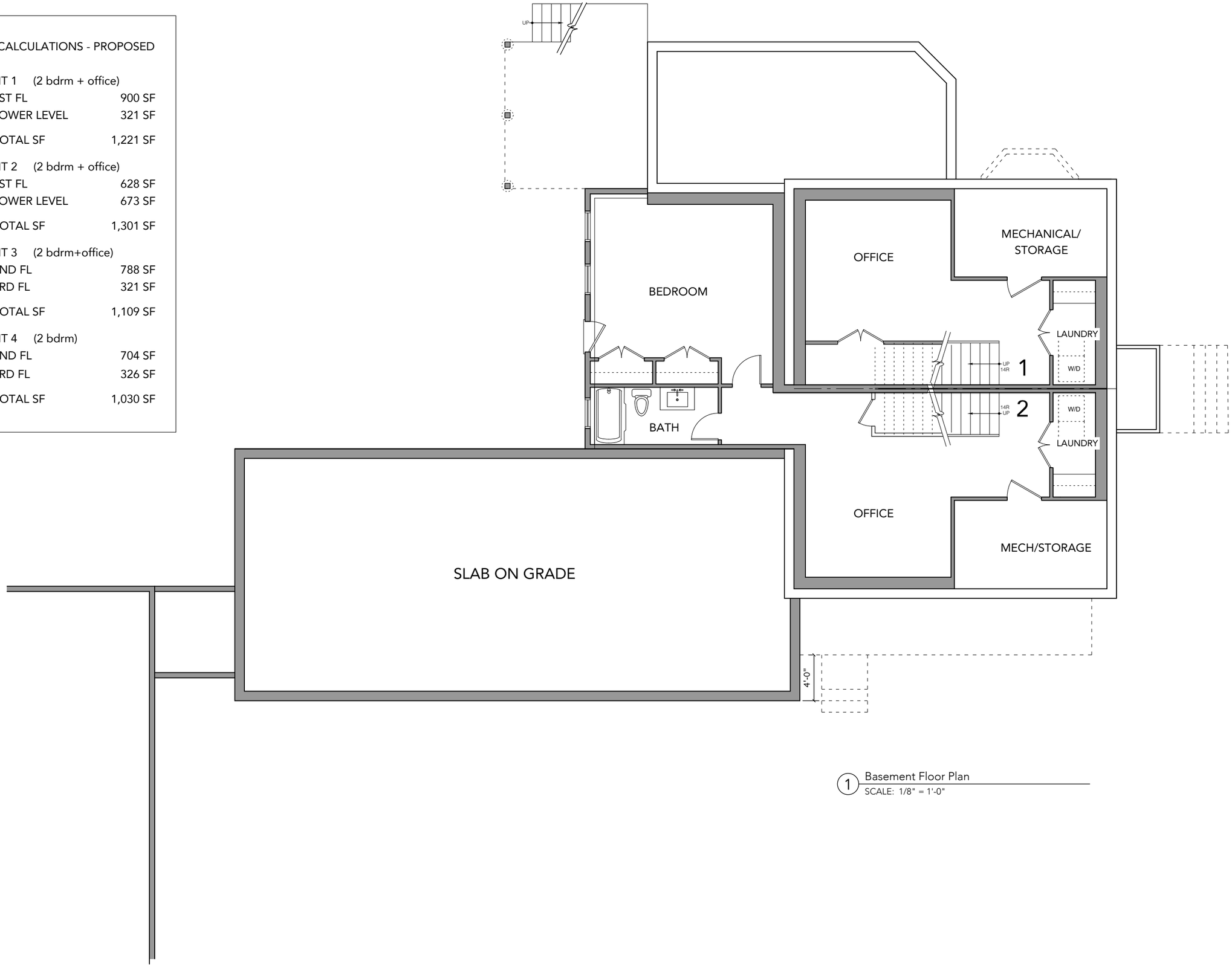

1 Basement Floor Plan
SCALE: 1/8" = 1'-0"

project:

80 HAVERHILL RESIDENCES

80 Haverhill Road
Amesbury, MA

architect:

GRAF ARCHITECTS
2 Liberty Street
Newburyport, MA
01950
T. 978 499 9442
www.grafarch.com

title:

PROPOSED Basement Floor Plan

SCALE: 1/8" = 1'-0"

23 october 2024

A01

SF CALCULATIONS - PROPOSED

UNIT 1	(2 bdrm + office)	
1ST FL		900 SF
LOWER LEVEL		321 SF
TOTAL SF		1,221 SF
UNIT 2	(2 bdrm + office)	
1ST FL		628 SF
LOWER LEVEL		673 SF
TOTAL SF		1,301 SF
UNIT 3	(2 bdrm+office)	
2ND FL		788 SF
3RD FL		321 SF
TOTAL SF		1,109 SF
UNIT 4	(2 bdrm)	
2ND FL		704 SF
3RD FL		326 SF
TOTAL SF		1,030 SF

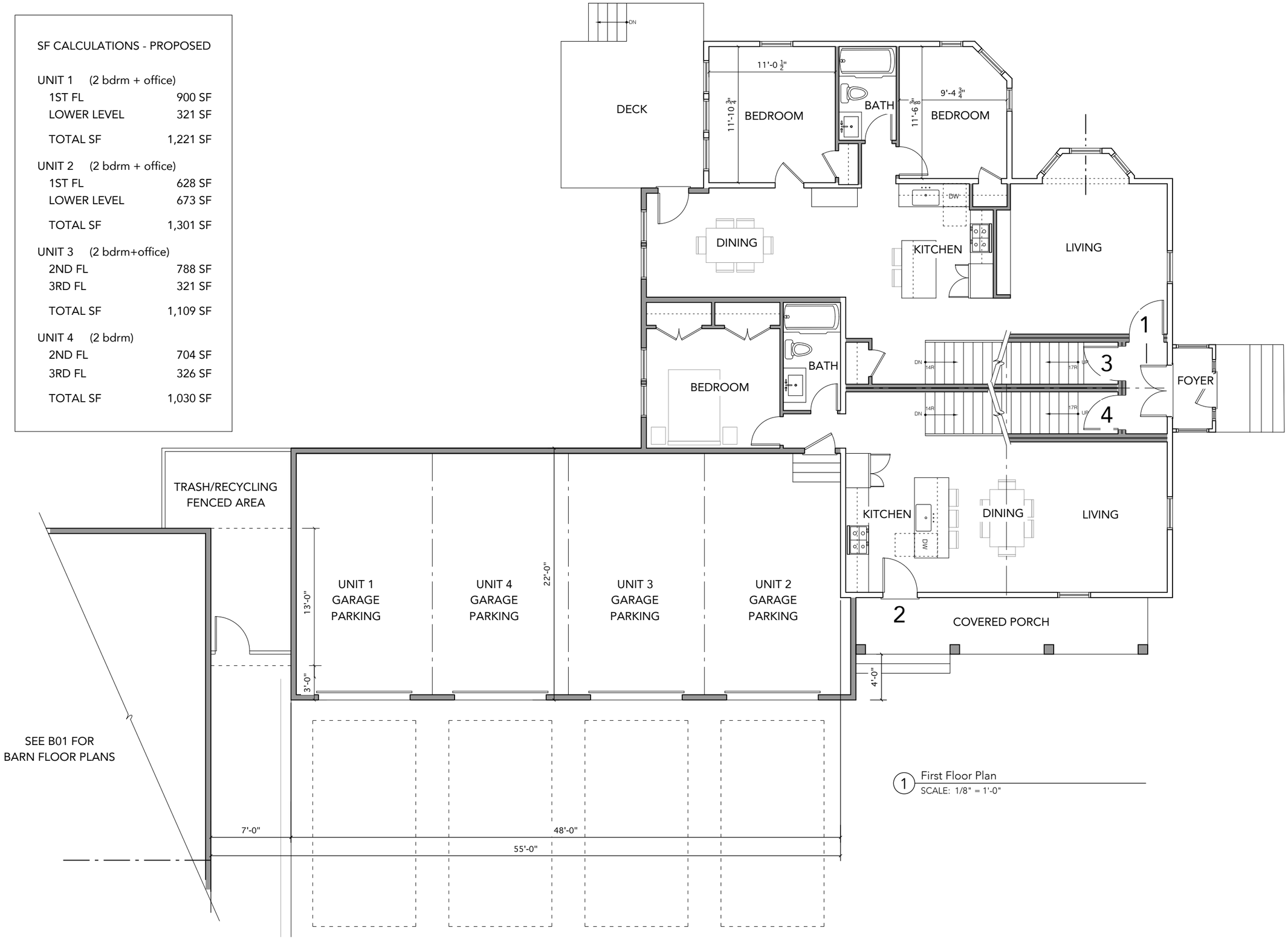

1 First Floor Plan
SCALE: 1/8" = 1'-0"

project:

80 HAVERHILL RESIDENCES

80 Haverhill Road
Amesbury, MA

architect:

GRAF ARCHITECTS
2 Liberty Street
Newburyport, MA
01950
T. 978 499 9442
www.grafarch.com

title:

PROPOSED First Floor Plan

SCALE: 1/8" = 1'-0"

23 october 2024

A02

SF CALCULATIONS - PROPOSED

UNIT 1	(2 bdrm + office)	
1ST FL		900 SF
LOWER LEVEL		321 SF
TOTAL SF		1,221 SF
UNIT 2	(2 bdrm + office)	
1ST FL		628 SF
LOWER LEVEL		673 SF
TOTAL SF		1,301 SF
UNIT 3	(2 bdrm+office)	
2ND FL		788 SF
3RD FL		321 SF
TOTAL SF		1,109 SF
UNIT 4	(2 bdrm)	
2ND FL		704 SF
3RD FL		326 SF
TOTAL SF		1,030 SF

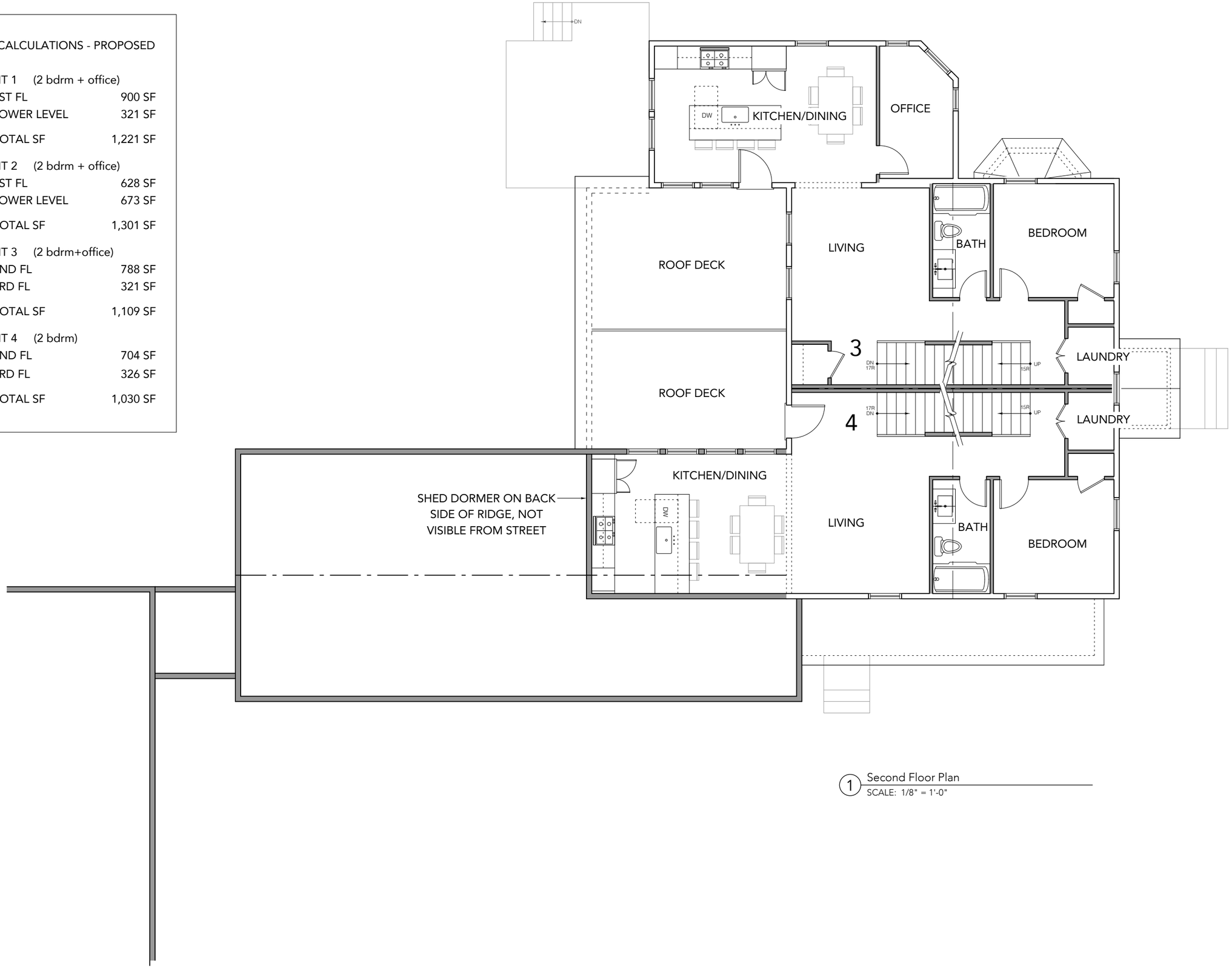

1 Second Floor Plan
SCALE: 1/8" = 1'-0"

project:

80 HAVERHILL RESIDENCES

80 Haverhill Road
Amesbury, MA

architect:

GRAF ARCHITECTS
2 Liberty Street
Newburyport, MA
01950
T. 978 499 9442
www.grafarch.com

title:

PROPOSED Second Floor Plan

SCALE: 1/8" = 1'-0"

23 october 2024

A03

SF CALCULATIONS - PROPOSED

UNIT 1	(2 bdrm + office)	
1ST FL		900 SF
LOWER LEVEL		321 SF
TOTAL SF		1,221 SF
UNIT 2	(2 bdrm + office)	
1ST FL		628 SF
LOWER LEVEL		673 SF
TOTAL SF		1,301 SF
UNIT 3	(2 bdrm+office)	
2ND FL		788 SF
3RD FL		321 SF
TOTAL SF		1,109 SF
UNIT 4	(2 bdrm)	
2ND FL		704 SF
3RD FL		326 SF
TOTAL SF		1,030 SF

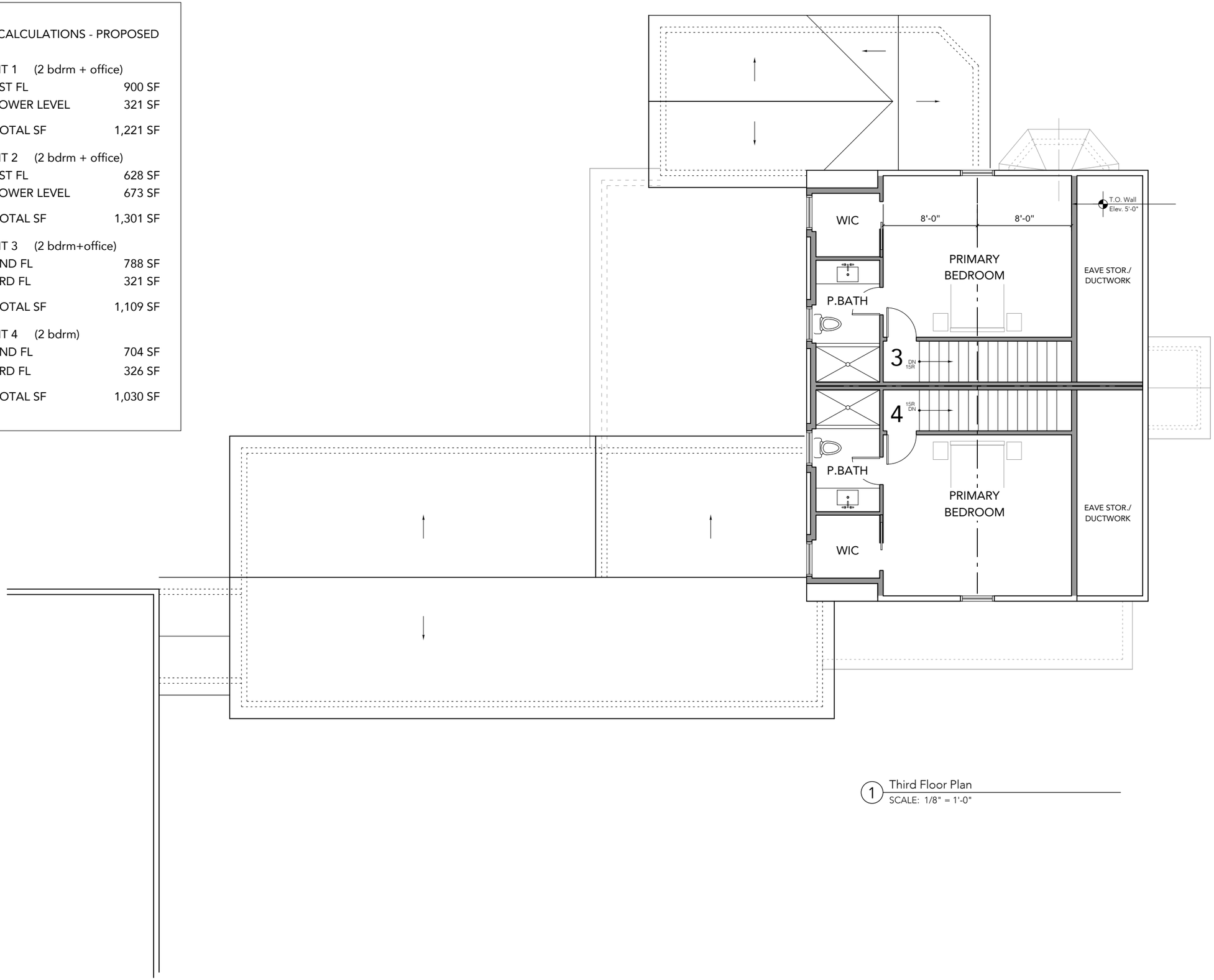

1 Third Floor Plan
SCALE: 1/8" = 1'-0"

project:

80 HAVERHILL RESIDENCES

80 Haverhill Road
Amesbury, MA

architect:

GRAF
ARCHITECTS
2 Liberty Street
Newburyport, MA
01950
T. 978 499 9442
www.grafarch.com

title:

PROPOSED
Third Floor Plan

SCALE: 1/8" = 1'-0"

23 october 2024

A04

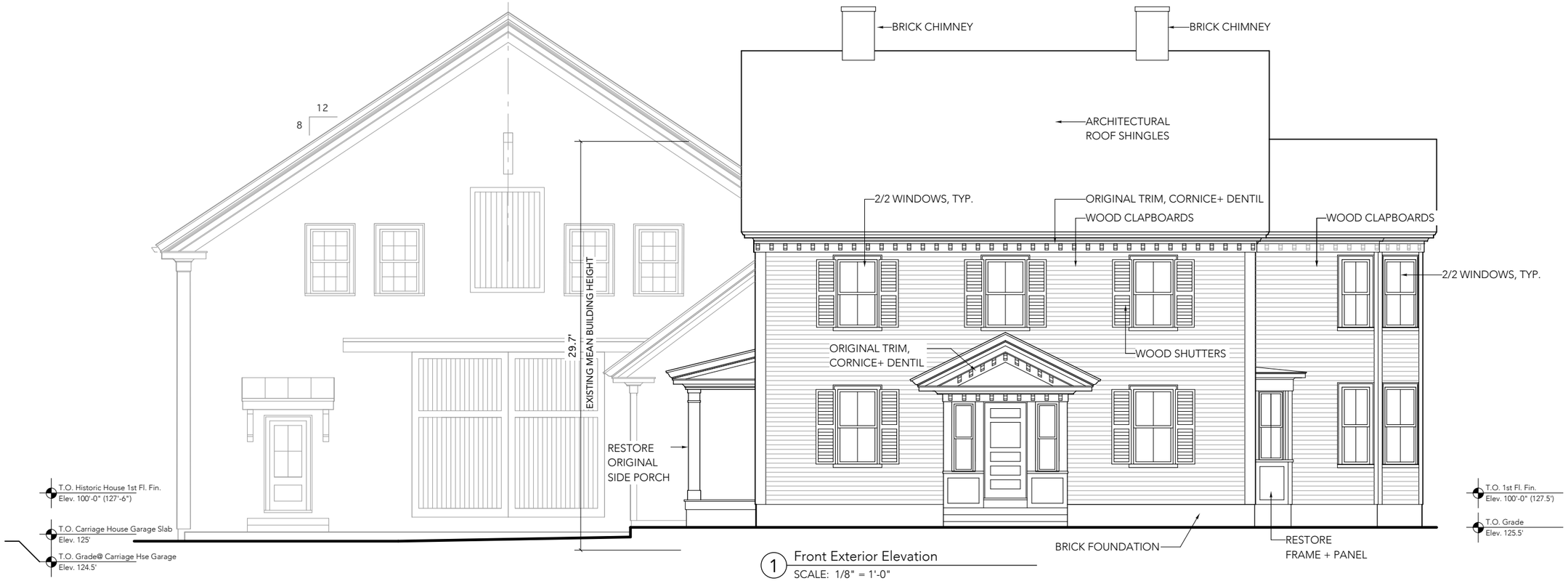

1 Front Exterior Elevation
SCALE: 1/8" = 1'-0"

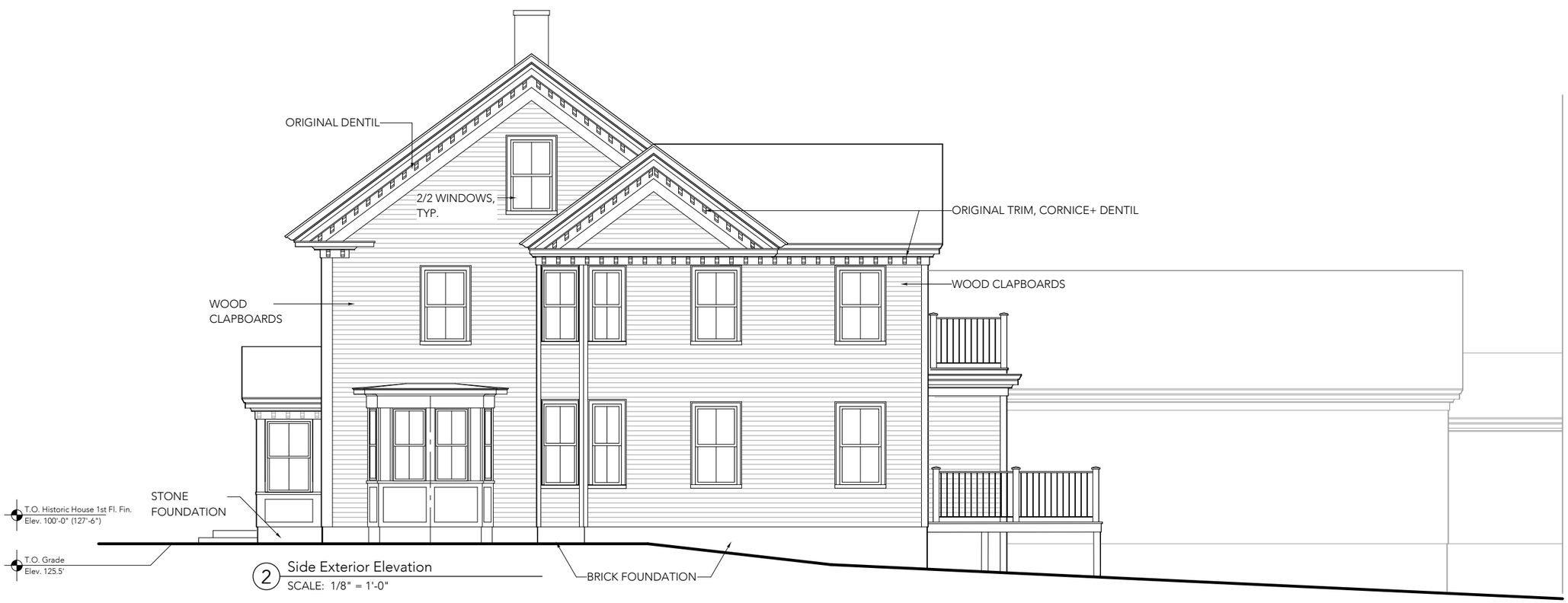

2 Side Exterior Elevation
SCALE: 1/8" = 1'-0"

project:

80 HAVERHILL RESIDENCES

80 Haverhill Road
Amesbury, MA

architect:

GRAF
ARCHITECTS
2 Liberty Street
Newburyport, MA
01950
T. 978 499 9442
www.grafarch.com

title:

PROPOSED Exterior Elevations

SCALE: 1/8" = 1'-0"

23 october 2024

A05

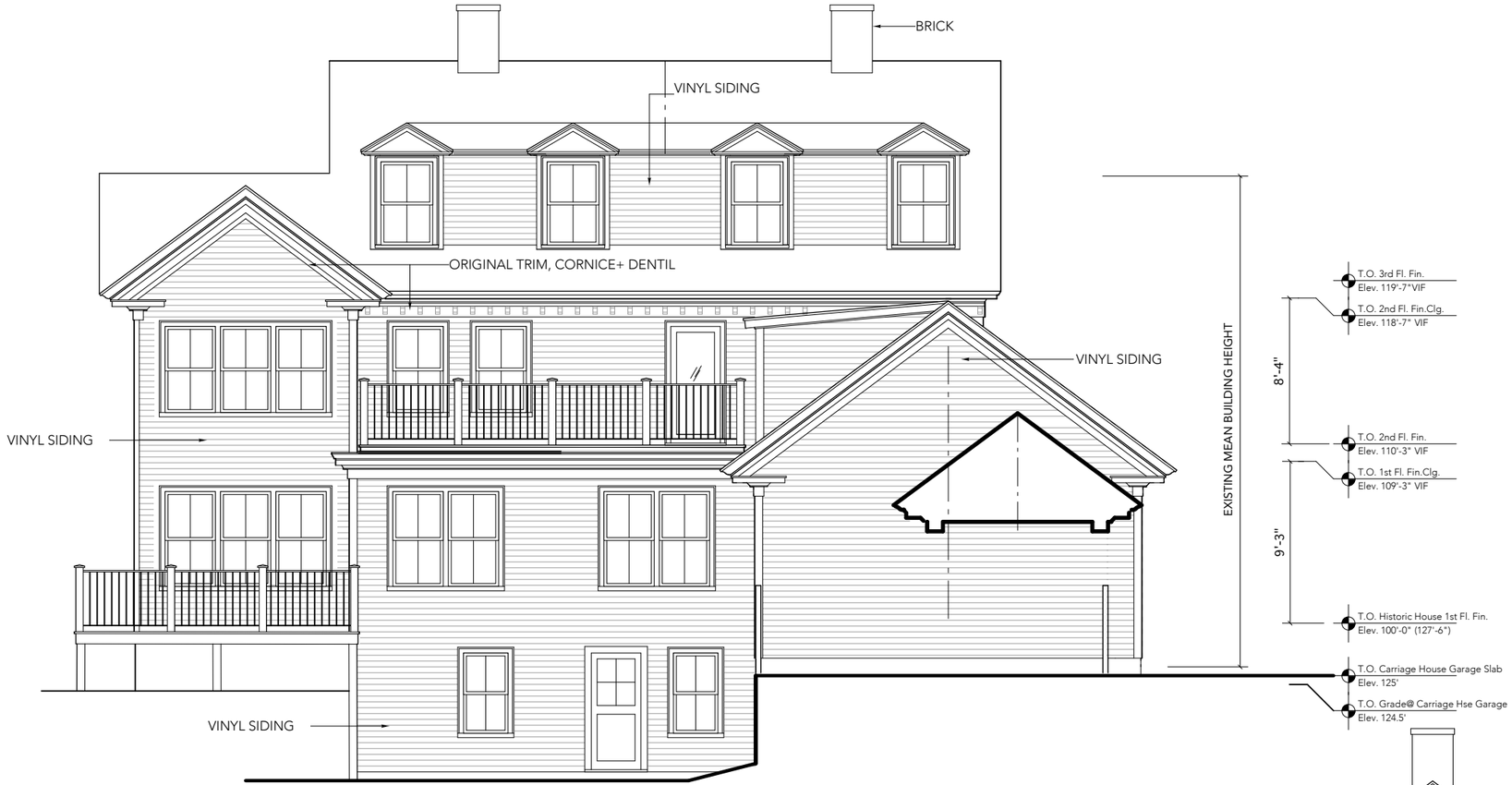

1 Rear Exterior Elevation
SCALE: 1/8" = 1'-0"

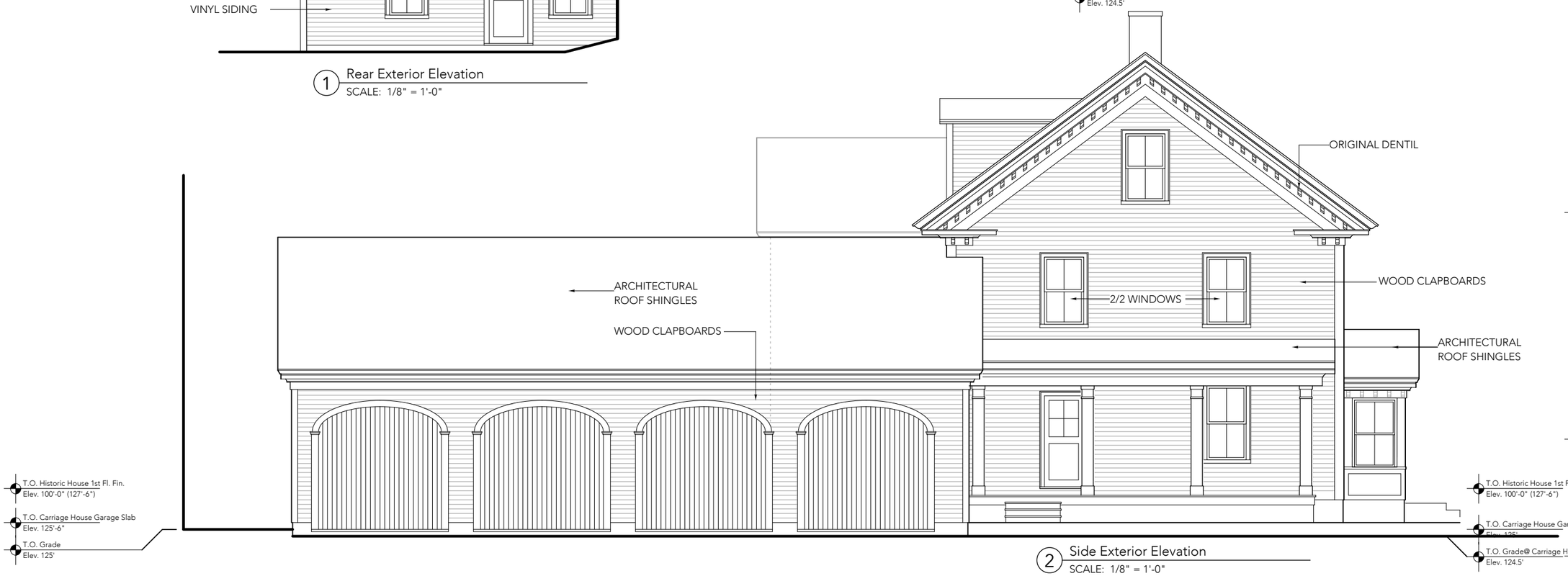

2 Side Exterior Elevation
SCALE: 1/8" = 1'-0"

project:

80 HAVERHILL RESIDENCES

80 Haverhill Road
Amesbury, MA

architect:

GRAF
ARCHITECTS
2 Liberty Street
Newburyport, MA
01950
T. 978 499 9442
www.grafarch.com

title:

PROPOSED Exterior Elevations

SCALE: 1/8" = 1'-0"

23 october 2024

A06

SF CALCULATIONS - PROPOSED

UNIT 5 (3 bdrm)	
1ST FL	925 SF
LOWER LEVEL	515 SF
TOTAL SF	1,430 SF
UNIT 6 (3 bdrm)	
1ST FL	1031 SF
LOWER LEVEL	515 SF
TOTAL SF	1,546 SF
UNIT 7 (3 bdrm)	
2ND FL	1,052 SF
3RD FL	515 SF
TOTAL SF	1,567 SF
UNIT 8 (3 bdrm)	
2ND FL	1,052 SF
3RD FL	515 SF
TOTAL SF	1,567 SF

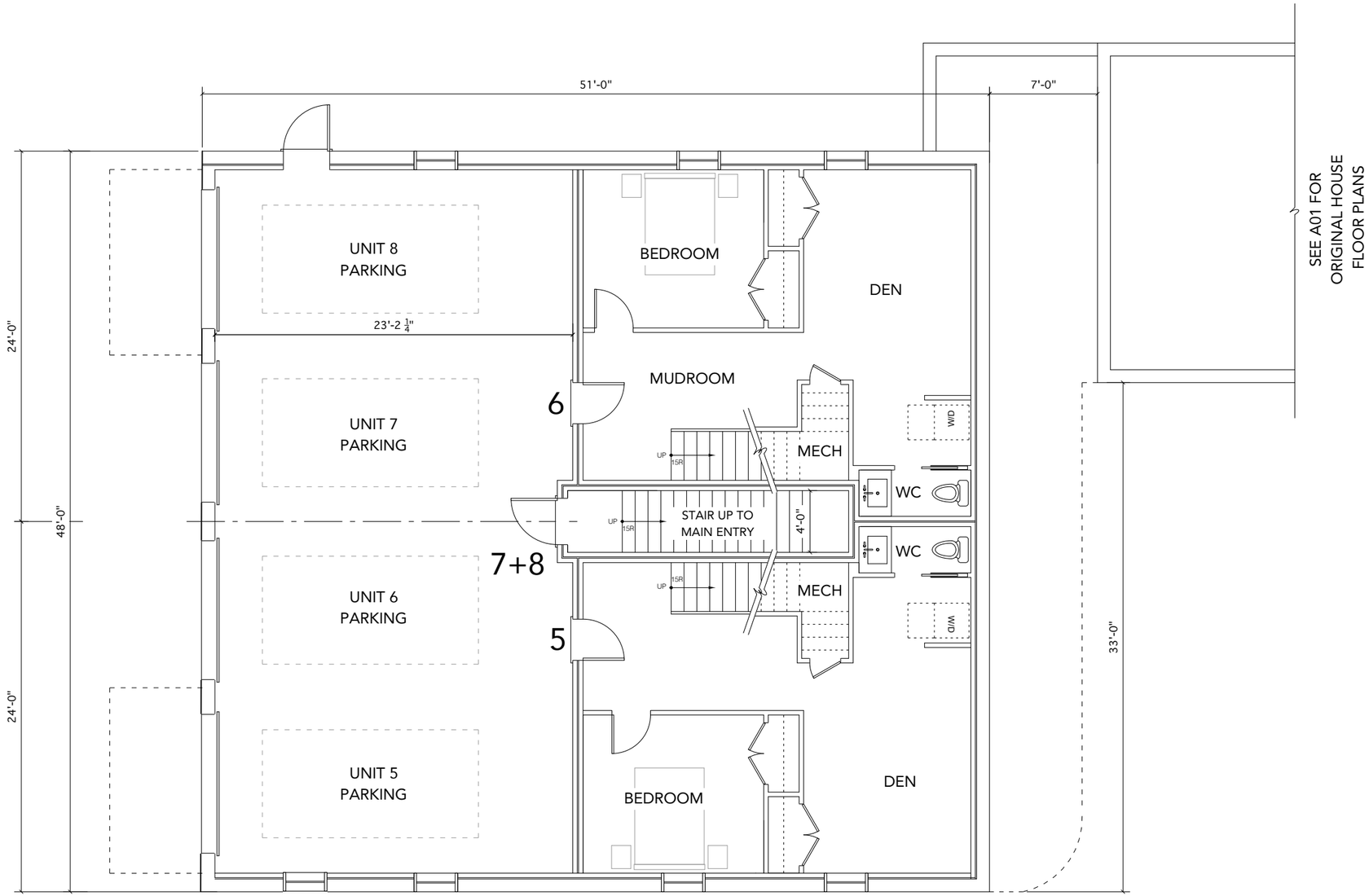

1 Basement Floor Plan
SCALE: 1/8" = 1'-0"

project:

80 HAVERHILL RESIDENCES

80 Haverhill Road
Amesbury, MA

architect:

GRAF
ARCHITECTS
2 Liberty Street
Newburyport, MA
01950
T. 978 499 9442
www.grafarch.com

title:

PROPOSED Barn Basement Floor Plan

SCALE: 1/8" = 1'-0"

23 october 2024

B01

SF CALCULATIONS - PROPOSED

UNIT 5 (3 bdrm)	
1ST FL	925 SF
LOWER LEVEL	515 SF
TOTAL SF	1,430 SF
UNIT 6 (3 bdrm)	
1ST FL	1031 SF
LOWER LEVEL	515 SF
TOTAL SF	1,546 SF
UNIT 7 (3 bdrm)	
2ND FL	1,052 SF
3RD FL	515 SF
TOTAL SF	1,567 SF
UNIT 8 (3 bdrm)	
2ND FL	1,052 SF
3RD FL	515 SF
TOTAL SF	1,567 SF

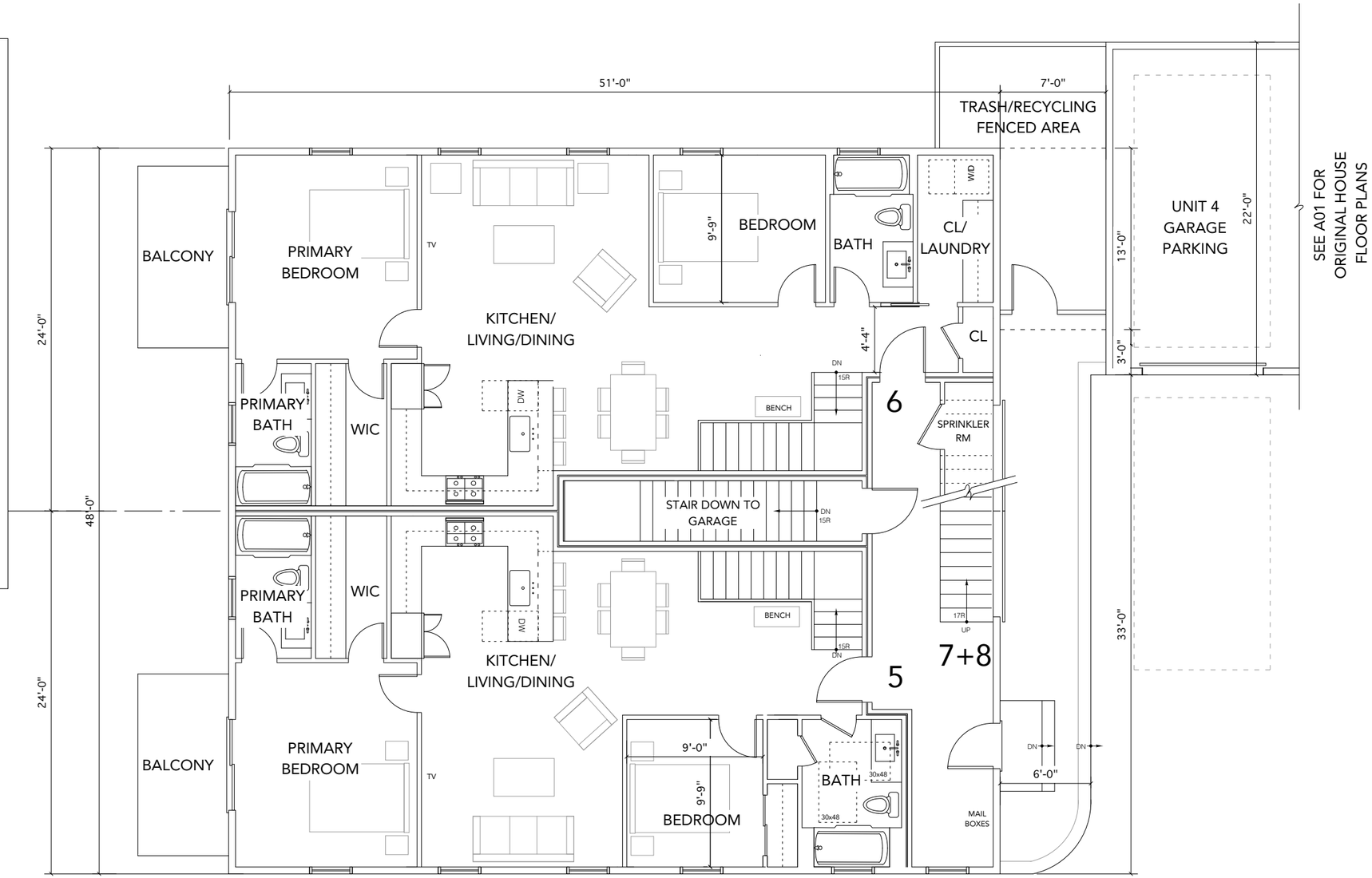

1 First Floor Plan
SCALE: 1/8" = 1'-0"

project:

80 HAVERHILL RESIDENCES

80 Haverhill Road
Amesbury, MA

architect:

GRAF ARCHITECTS
2 Liberty Street
Newburyport, MA
01950
T. 978 499 9442
www.grafarch.com

title:

PROPOSED
Barn First
Floor Plan

SCALE: 1/8" = 1'-0"

23 october 2024

B02

SF CALCULATIONS - PROPOSED

UNIT 5	(3 bdrm)	
1ST FL		925 SF
LOWER LEVEL		515 SF
TOTAL SF		1,430 SF
UNIT 6	(3 bdrm)	
1ST FL		1031 SF
LOWER LEVEL		515 SF
TOTAL SF		1,546 SF
UNIT 7	(3 bdrm)	
2ND FL		1,052 SF
3RD FL		515 SF
TOTAL SF		1,567 SF
UNIT 8	(3 bdrm)	
2ND FL		1,052 SF
3RD FL		515 SF
TOTAL SF		1,567 SF

1 Second Floor Plan
SCALE: 1/8" = 1'-0"

project:

80 HAVERHILL RESIDENCES

80 Haverhill Road
Amesbury, MA

architect:

GRAF ARCHITECTS
2 Liberty Street
Newburyport, MA
01950
T. 978 499 9442
www.grafarch.com

title:

PROPOSED Barn Second Floor Plan

SCALE: 1/8" = 1'-0"

23 october 2024

B03

SF CALCULATIONS - PROPOSED

UNIT 5	(3 bdrm)	
1ST FL		925 SF
LOWER LEVEL		515 SF
TOTAL SF		1,430 SF
UNIT 6	(3 bdrm)	
1ST FL		1031 SF
LOWER LEVEL		515 SF
TOTAL SF		1,546 SF
UNIT 7	(3 bdrm)	
2ND FL		1,052 SF
3RD FL		515 SF
TOTAL SF		1,567 SF
UNIT 8	(3 bdrm)	
2ND FL		1,052 SF
3RD FL		515 SF
TOTAL SF		1,567 SF

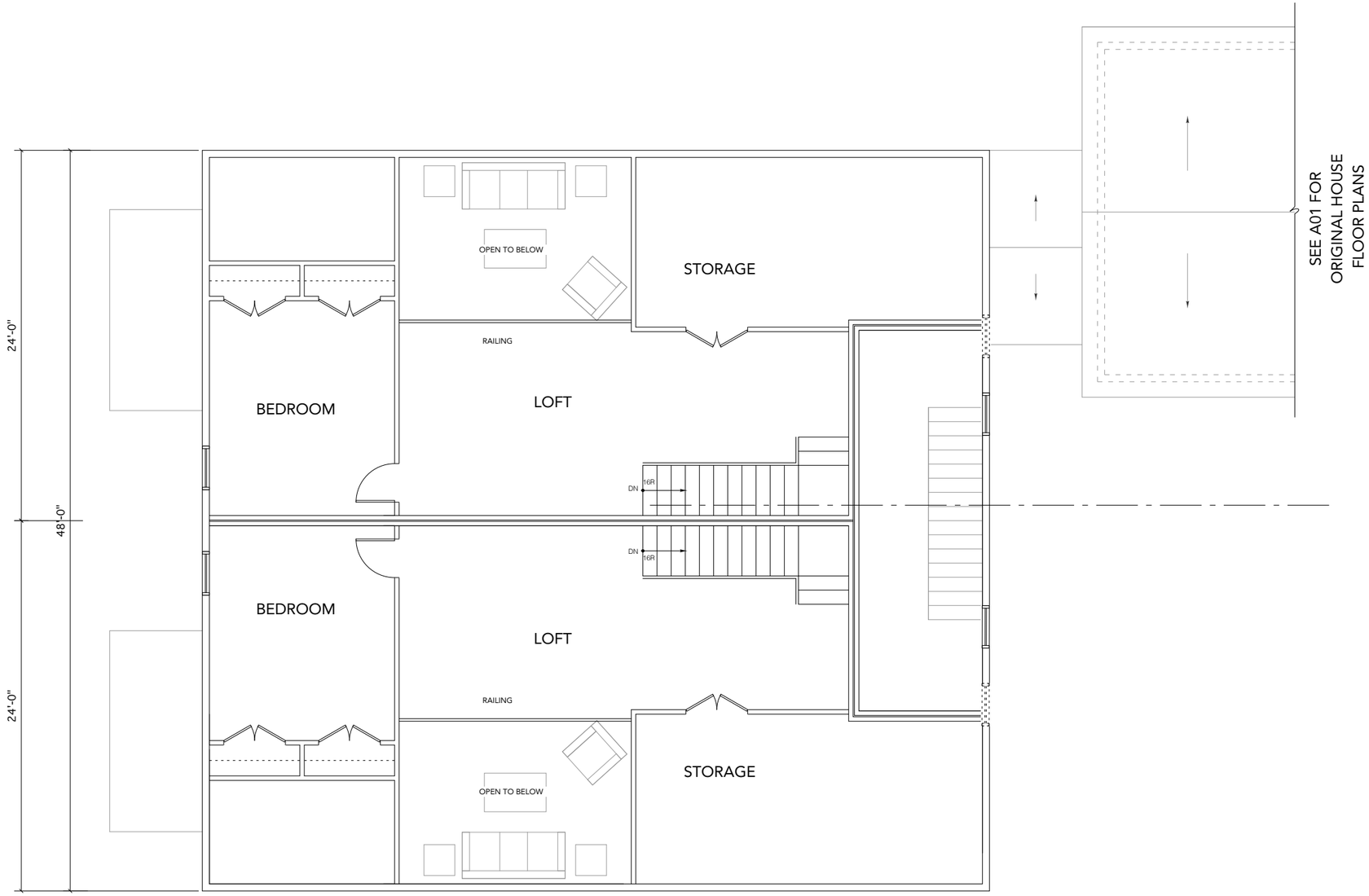

1 Third Floor Plan
SCALE: 1/8" = 1'-0"

project:

80 HAVERHILL RESIDENCES

80 Haverhill Road
Amesbury, MA

architect:

GRAF ARCHITECTS
2 Liberty Street
Newburyport, MA
01950
T. 978 499 9442
www.grafarch.com

title:

PROPOSED Barn Third Floor Plan

SCALE: 1/8" = 1'-0"

23 october 2024

B04

1 Exterior Elevation - FRONT
SCALE: 1/8" = 1'-0"

project:

80 HAVERHILL RESIDENCES

80 Haverhill Street
Amesbury, MA

architect:

GRAF
ARCHITECTS
2 Liberty Street
Newburyport, MA
01950
T. 978 499 9442
www.grafarch.com

title:

PROPOSED BARN Exterior Elevations

SCALE: 1/8" = 1'-0"

23 october 2024

B05

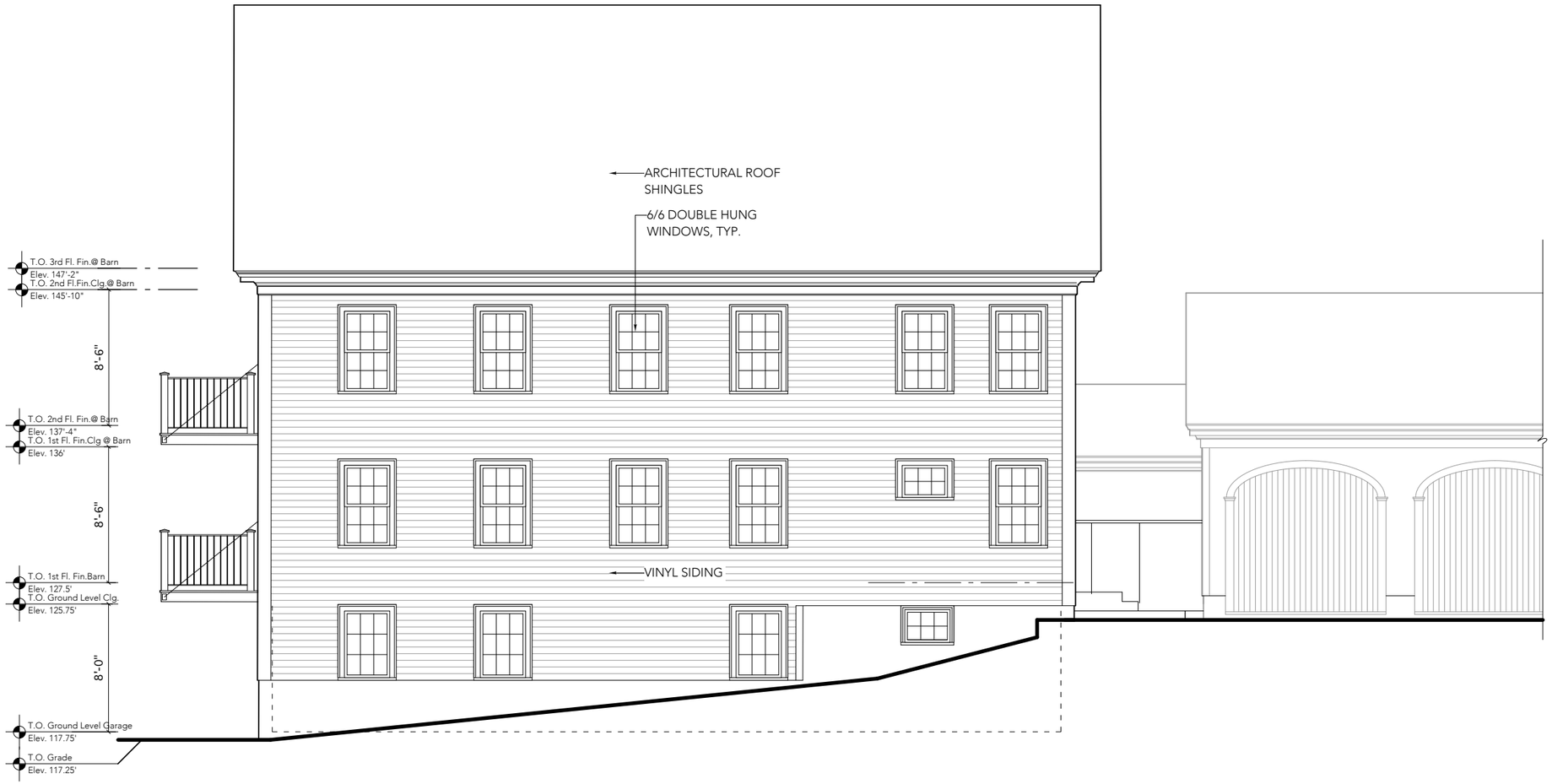

1 Exterior Elevation - SIDE
SCALE: 1/8" = 1'-0"

project:

80 HAVERHILL RESIDENCES

80 Haverhill Street
Amesbury, MA

architect:

GRAF ARCHITECTS
2 Liberty Street
Newburyport, MA
01950
T. 978 499 9442
www.grafarch.com

title:

PROPOSED BARN Exterior Elevations

SCALE: 1/8" = 1'-0"

23 october 2024

B06

1 Exterior Elevation - REAR
SCALE: 1/8" = 1'-0"

project:

80 HAVERHILL RESIDENCES

80 Haverhill Street
Amesbury, MA

architect:

GRAF
ARCHITECTS
2 Liberty Street
Newburyport, MA
01950
T. 978 499 9442
www.grafarch.com

title:

PROPOSED BARN Exterior Elevations

SCALE: 1/8" = 1'-0"

23 october 2024

B07

1 Exterior Elevation - SIDE
SCALE: 1/8" = 1'-0"

project:

80 HAVERHILL RESIDENCES

80 Haverhill Street
Amesbury, MA

architect:

GRAF
ARCHITECTS
2 Liberty Street
Newburyport, MA
01950
T. 978 499 9442
www.grafarch.com

title:

PROPOSED BARN Exterior Elevations

SCALE: 1/8" = 1'-0"

23 october 2024

B08

Attachment:

Photographs

Haverhill R
82
78

d

Attachment:

Draft Preservation Restriction

PRESERVATION RESTRICTION AGREEMENT

80 Haverhill Road, LLC and

City of Amesbury,
Acting by and through its Historical Commission

THIS PRESERVATION RESTRICTION AGREEMENT is made this ___ day of _____, [2024], by and between **80 Haverhill Road, LLC** ("Grantor"), having an address of 80 Haverhill Road, Amesbury, Massachusetts 01913, and the **City of Amesbury,** a municipality of the Commonwealth of Massachusetts, acting by and through its Historical Commission pursuant to G.L. c. 40, § 8D ("Grantee").

WITNESSETH:

WHEREAS, Grantor is the owner of real property located at 80 Haverhill Road in the City of Amesbury, Essex County, Massachusetts, being the parcel identified as Assessors Map 85-59, and described more particularly in a deed recorded with the Essex South Registry of Deeds in Book 41666, Page 459 (the "Property"), said Property including a multi-family structure (the "Building"), which Property and which Building are described more particularly in Exhibit A, attached hereto and incorporated herein and this Restriction shall not apply to any other building to be built upon the Property as approved under that certain Special Permit issued on [DATE] and recorded in the Essex South Registry of Deeds Book [____] Page [___];

WHEREAS, Grantee is a municipality and is interested in the preservation and conservation of sites, buildings, and objects of local, state and national significance in the City of Amesbury and is authorized to accept and hold preservation restrictions under the Massachusetts General Laws, Chapter 184, Sections 31, 32, and 33 (the "Act");

WHEREAS, the Amesbury Historical Commission is a governmental body whose purposes include the preservation and protection of buildings, structures, vessels, real property, documents or artifacts that are listed or eligible for listing on the state register of historic places or have been determined by the Commission to be significant in the history, archeology, architecture or culture of the City;

WHEREAS, Grantee has designated the Amesbury Historical Commission to administer, manage, and enforce preservation agreements;

WHEREAS, the Building and site has Architectural and Historical Significance. It consists of a 2 ½ story, side-gable main block; a cross-gables, two-story ell with a clipped bay stepped back on the right side of the main block, two small, telescoping, ells extending off the back left corner of the main block, and a partially-enclosed porch with shed roof extending across the left side elevation of the main block. According to Assessor Records it was constructed on or around 1885, according to the Property's original Form B, 1800, and according to the Property's updated Form B, between 1877-1884.

WHEREAS, the Building's Preservation Values (defined below) are documented in Exhibits A, B, C and D (hereinafter, collectively "Baseline Documentation") incorporated herein by reference, which Baseline Documentation the parties agree provides an accurate representation of the Property as of the date of this Preservation Restriction Agreement;

WHEREAS, the Baseline Documentation includes the following:

1. Legal Description of the Property (Exhibit A)
2. Architectural Description of the Property and Form B (Exhibit B)
3. Photographs (Exhibit C)
4. Architect's Drawings of the Building (Exhibit D)

WHEREAS, Grantor is going to undertake work to renovate and rehabilitate the Building;

WHEREAS, Grantor and Grantee recognize the architectural, historic, and cultural values ("Preservation Values") and significance of the Property, and have the common purpose of preserving the aforesaid Preservation Values and significance of the Property and the Building;

WHEREAS, the grant of a preservation restriction by Grantor to Grantee on the Property will assist in the preservation and maintenance of the Building and its architectural, historic and cultural features for the benefit of the people of the City of Amesbury, the County of Essex, the Commonwealth of Massachusetts, and the United States of America;

WHEREAS, to that end, Grantor desires to grant to Grantee, and Grantee desires to accept, a preservation restriction in gross on the Property and the Building pursuant to the Act.

NOW, THEREFORE, Grantor does hereby irrevocably grant and convey unto the Grantee a Preservation Restriction Agreement in gross over the Property and the Building described in Exhibits A, B, C and D.

PURPOSE

1.1 Purpose. It is the purpose of this Preservation Restriction Agreement to assure that the features and characteristics that embody the architectural, historic and cultural significance of the exterior of the Building will be retained and maintained substantially in their current condition and to prevent any use or change in the Property that will significantly impair or interfere with the Building's Preservation Values during the term of this Preservation Restriction Agreement.

1.2 Improvements. Grantor agrees to make the improvements to the Building exterior as set forth in Exhibit D and in accordance with the terms of this Preservation Restriction Agreement.

GRANTOR'S COVENANTS

2.1 Covenant to Maintain. Grantor agrees at all times to maintain the exterior of the Building in as good structural condition and sound state of repair as that existing on the date of this Preservation Restriction Agreement and/or the completion of the Work and otherwise in the condition required by this Preservation Restriction Agreement, and shall comply with all federal, state and local laws, codes and by-laws applicable to the Property and/or the Building. Grantor's obligation to maintain shall require replacement, repair, reconstruction and where necessary replacement in kind by Grantor whenever necessary to preserve the Building in a good, sound and attractive condition and state of repair. The above notwithstanding, new landscaping or gardens may be created, and surface materials on paths or drives may

be changed, only as provided under paragraph 3.1. Subject to the casualty provisions of paragraphs 6 and 7, this obligation to maintain shall require replacement, rebuilding, repair and reconstruction of the Building whenever necessary in accordance with The Secretary of Interior's Standards for The Treatment of Historical Properties with Guidelines for Preserving, Rehabilitating, Restoring and Reconstructing Historic Buildings (36 CFR 67 and 68), as these may be amended from time to time (hereinafter the "Secretary's Standards").

2.2 Prohibited Activities.

The following acts or uses are expressly forbidden on, over, or under the Property, except as otherwise conditioned in this paragraph:

(a) the Building shall not be moved, demolished, removed or razed except as described in paragraphs 6 and 7;

(b) no barrier shall be constructed, erected or allowed to grow on the Property which would impair the visibility from the street of the Property or the Building without the prior approval of the Grantee;

(c) the dumping of ashes, trash, rubbish, or any other unsightly or offensive materials is prohibited on the Property;

(d) no above ground utility transmission lines, except those reasonably necessary for the existing Building, may be created on the Property, subject to utility easements already recorded; and

(e) except as otherwise permitted pursuant to that certain Special Permit dated [__] and recorded in Book [__] Page [__] and recorded in the Essex South Registry of Deeds, no other buildings or structures, including camping accommodations, mobile homes or cell towers, shall be erected or placed on the Property hereafter except for temporary structures required for maintenance or rehabilitation of the Property, such as construction trailers.

GRANTOR'S CONDITIONAL RIGHTS

3.1 Conditional Rights Requiring Approval by Grantee. Without prior express written approval of the Grantee, which approval shall not be unreasonably withheld or delayed but which may be subject to such reasonable conditions as Grantee in its discretion may determine, Grantor shall not make any changes to the exterior of the Building, including additions to and the alteration, partial removal, construction, remodeling, or other physical or structural change to the facades of the Building, and any change in design, or material thereof. Activities by Grantor to maintain the exterior of the Building, which are intended to be performed in accordance with paragraph 2.1, and which are minor in nature, shall not require Grantee's prior approval. For the purposes of this paragraph, the interpretation of what constitutes ordinary maintenance of a minor nature is governed by the Restriction Guidelines which are attached to this Preservation Restriction Agreement and incorporated by reference. For purposes of this Preservation Restriction Agreement, the exterior of the Building shall be defined as all surfaces (including but not limited to walls, roofs, foundations, windows including sash and enframements, doors, gutters, downspouts, and associated hardware and visible details) which are in contact with the exterior of the Building. Subject to this restriction are any activities, including construction or alteration or any internal structural features that act as support for external surfaces, construction or alteration of which may alter the exterior appearance of the Building or threaten the structural stability or integrity of the exterior of the Building.

3.2 Review of the Grantor's Request for Approval. Should Grantor wish to exercise the conditional rights set out or referred to in paragraph 3.1, Grantor shall submit to Grantee, for Grantee's approval, two

copies of information (including plans, specifications and designs, where appropriate) identifying the proposed activity with reasonable specificity. In connection therewith, Grantor shall also submit to Grantee a timetable for the proposed activity sufficient to permit Grantee to monitor such activity. Within sixty (60) days of Grantee's receipt of any plan or written request for approval hereunder, Grantee shall certify in writing that (a) it approves the plan or request, or (b) it disapproves the plan or request as submitted in which case Grantee shall provide Grantor with written suggestions for modification or a written explanation for Grantee's disapproval. Any failure by Grantee to act within sixty (60) days of receipt of Grantors' submission or resubmission of plans or requests shall be deemed to constitute approval by Grantee of the plan or request as submitted and to permit Grantor to undertake the proposed activity in accordance with the plan or request submitted.

3.3 Conditional Rights Requiring the Approval of the Massachusetts Historical Commission. The conduct of archeological activities on the Property, including without limitation, survey, excavation and artifact retrieval, may occur only following the submission of an archeological field investigation prepared by Grantor and approved in writing by the State Archeologist of the Massachusetts Historical Commission (G.L. Ch.9, Section 27C, 950 CMR 70.00)

STANDARDS FOR REVIEW

4. Grantee shall apply Secretary's Standards whenever (a) exercising any authority created by this Preservation Restriction Agreement to inspect the Property; (b) reviewing any construction, alteration, repair or maintenance; (c) reviewing casualty damage or (d) reconstructing or approving reconstruction of the Building following casualty damage.

GRANTORS' RESERVED RIGHTS

5. Grantors' Rights Not Requiring Further Approval by Grantee. Subject to the provision of paragraphs 2.1, 2.2, and 3.1, the following rights, uses, and activities of or by Grantor on, over, or under the Property are permitted by this Preservation Restriction Agreement and by Grantee without further approval by Grantee:

(a) the right to engage in all those acts and uses that: (i) are permitted by governmental statute or regulation; (ii) do not substantially impair the conservation and Preservation Values of the Property; and (iii) are not inconsistent with the Purpose of this Preservation Restriction Agreement.

(b) pursuant to the provisions of paragraph 2.1, the right to maintain and repair the Building strictly accordingly to the Secretary's Standards. As used in this subparagraph the right to maintain and repair shall mean the use by Grantor of in-kind materials and colors, applied with workmanship comparable to that which was used in the construction or application of those materials being repaired or maintained, for the purpose of retaining in good condition the appearance and construction of the Building. The right to maintain and repair as used in this subparagraph shall not include the right to make changes in appearance, materials, and workmanship from that existing prior to the maintenance and repair without the prior approval of Grantee in accordance with the provisions of paragraphs 3.1 and 3.2; and

(c) the right to make changes of any kind to the interior of the Building, provided such changes do not alter materially the appearance of the exterior of the Building in contravention of this Preservation Restriction Agreement.

CASUALTY DAMAGE OR DESTRUCTION; INSURANCE

6. Casualty Damage or Destruction. In the event that the Building or any part thereof shall be damaged or destroyed by fire, flood, windstorm, hurricane, earth movement or other casualty, Grantor shall notify Grantee in writing within fourteen (14) days of the damage or destruction, such notification including what, if any, emergency work has been completed. No repairs or reconstruction of any type other than temporary emergency work to prevent further damage to the Building and to protect public safety shall be undertaken by Grantor without Grantee's prior written approval of the work. Within thirty (30) days of the date of damage or destruction, if required by Grantee, Grantor at Grantor's expense shall submit to the Grantee a written report prepared by a qualified restoration architect and an engineer who are acceptable to the Grantee, which report shall include the following: (a) an assessment of the nature and extent of the damage; (b) a determination of the feasibility of the restoration of the Building and/or reconstruction of damaged or destroyed portions of the Building; and (c) a report of such restoration and/or reconstruction work necessary to return the Building to the condition existing at the date thereof.

7. Review After Casualty Damage or Destruction. If, after reviewing the report provided in paragraph 6 and assessing the availability of insurance proceeds after satisfaction of any mortgagee's/lender's claims under paragraph 8, Grantor and Grantee agree that the Purpose of this Preservation Restriction Agreement will be served by such restoration/reconstruction, Grantor and Grantee shall establish a schedule under which Grantor shall complete the restoration/reconstruction of the Building in accordance with plans and specifications consented to by the parties to at least the total of the casualty insurance proceeds available to the Grantor.

If, after reviewing the report and assessing the availability of the insurance proceeds after satisfaction of any mortgagee's/lender's claims under paragraph 8, Grantor and Grantee agree that restoration/ reconstruction of the Property is impractical or impossible, or agree that the Purpose of this Preservation Restriction Agreement would not be served by such restoration/ reconstruction, Grantor may with prior written consent of Grantee, alter, demolish, remove or raze the Building and/or construct new improvements on the Property. In such event, Grantor and Grantee may agree to extinguish this Preservation Restriction Agreement in accordance with the laws of the Commonwealth of Massachusetts and paragraph 21.1 hereof.

If, after reviewing the report and assessing the availability of insurance proceeds after satisfaction of any mortgagee's/lender's claims under paragraph 8, Grantor and Grantee are unable to agree that the Purpose of this Preservation Restriction Agreement will or will not be served by such restoration/reconstruction, the matter may be referred by either party to binding arbitration and settled in accordance with the Commonwealth of Massachusetts arbitration statute then in effect, and all other applicable laws, rules, and regulations.

8. Insurance. Grantor shall keep the Property insured by an insurance company rated "AMB-1" or better by AM Best for the full replacement value against loss from the perils commonly insured under standard fire and extended coverage policies and comprehensive general liability insurance against claims for personal injury, death and property damage. Property damage insurance shall include change in condition and building ordinance coverage, in form and amount sufficient to replace fully the damaged Property and Building without cost or expense to Grantor or contribution or coinsurance from Grantor. Grantor shall deliver to Grantee, within ten (10) business days of Grantee's written request therefore, certificates of such insurance coverage. Provided, however, that whenever the Property is encumbered with a mortgage or deed of trust nothing contained in this paragraph shall jeopardize the prior claim, if any, of the mortgagee/lender to the insurance proceeds.

INDEMNIFICATION; TAXES

9. Indemnification. Grantor hereby agrees to pay, protect, indemnify, hold harmless and defend at its own cost and expense, Grantee, its agents, directors and employees, or independent contractors from and

against any and all claims, liabilities, expenses, costs, damages, losses and expenditures (including reasonable attorneys' fees and disbursements hereafter incurred) arising out of or in connection with injury to or death of any person on or about the Property; physical damage to the Property; the presence or release in, on, or about the Property, at any time, of any substance now or hereafter defined, listed or otherwise classified pursuant to any law, ordinance or regulation as a hazardous, toxic, polluting or contaminating substance; or other injury or damage occurring on or about the Property, unless such injury or damage is caused by Grantee or agent, trustee, employee or contractor of Grantee. In the event that Grantor is required to indemnify Grantee pursuant to the terms of this paragraph, the amount of such indemnity until discharged shall constitute a lien on the Property with the same effect and priority as a mechanic's lien, provided, however, that nothing contained herein shall jeopardize the priority of any recorded first priority mortgage given in connection with a promissory note secured by the Property.

10. Taxes. Grantor shall pay all general taxes, special taxes, special assessments, water charges, sewer service charges, and other charges which may become a lien on the Property.

ADMINISTRATION AND ENFORCEMENT

11. Written Notice. Any notice Grantor or Grantee may desire or be required to give to the other party shall be in writing and shall be mailed postage prepaid by overnight courier, facsimile transmission, registered or certified mail with return receipt requested or hand delivered; if to Grantor, at 80 Haverhill Road, Amesbury, MA 01913, and if to Grantee, at Amesbury City Hall, 62 Friend Street, Amesbury, MA 01913, Attention: Amesbury Historical Commission.

Each party may change its address set forth herein by a notice to such effect to the other party given pursuant hereto.

12. Evidence of Compliance. Upon request by Grantor, Grantee shall promptly furnish Grantor with certification that, to the best of Grantee's knowledge, Grantor is in compliance with the obligations of Grantor contained herein, or that otherwise evidences the status of this Preservation Restriction Agreement to the extent of the Grantee's knowledge thereof.

13. Inspection. With the consent of Grantor, representatives of Grantee shall be permitted at all reasonable times to inspect the Property, including the interior of the Building. Grantor covenants not to unreasonably withhold consent in determining dates and times for such inspections.

14. Grantee's Remedies. The rights hereby granted shall include the right to enforce this Preservation Restriction Agreement by appropriate legal proceedings and to institute suit(s) to enjoin any violation of the terms of this Preservation Restriction Agreement by ex parte, temporary, preliminary and or permanent injunction, including without limitation prohibitory and/or mandatory injunctive relief and to require the restoration of the Property and Building to the condition and appearance required under this Preservation Restriction Agreement (it being agreed that Grantee may have no adequate remedy at law), which rights shall be in addition to, and not in substitution of, all other legal and other equitable remedies available to Grantee to enforce Grantor's obligation hereunder. Except in the case of an emergency, Grantee agrees that no such enforcement actions will be taken unless (a) Grantor has sent written notice to Grantee, specifying Grantee's failure to comply with the terms of this Preservation Restriction Agreement, and (b) Grantee fails to cure the same within thirty (30) days from the date of the Grantee's notice, or, if such cure cannot reasonably be completed within said thirty (30) days, Grantor has commenced to cure said default within said thirty (30) day period and is pursuing said cure diligently to completion.

In the event Grantor is found to have violated any of Grantor's obligations, Grantor shall reimburse Grantee for any reasonable costs or expenses incurred in connection with Grantee's enforcement of the terms of this Preservation Restriction Agreement, including all reasonable court costs, and attorney's,

architectural, engineering and expert witness fees, together with interest thereon at an interest rate two percent points (2%) higher than the prime lending rate.

Exercise by Grantee of one remedy hereunder shall not have the effect of waiving or limiting the use of any other remedy, and the failure to exercise any remedy shall not have the effect of waiving or limiting the use of any other remedy or the use of such remedy at any other time.

By its acceptance, Grantee does not undertake any liability or obligation relating to the condition of the Property or the Building, including with respect to compliance with hazardous materials or other environmental laws and regulations. Nothing herein shall impose upon the Grantee any affirmative obligation or liability relating to the condition of the Property or the Building.

15. Notice from Government Authorities. Grantor shall deliver to Grantee copies of any notice of violation or lien relating to the Property received by Grantor from any government authority within five (5) days of receipt by Grantor. Upon request by Grantee, Grantor shall promptly furnish Grantee with evidence of Grantor's compliance with such notice or lien where compliance is required by law.

16. Intentionally Omitted.

17. Liens. Any lien on the Property created pursuant to any paragraph of this Preservation Restriction Agreement may be confirmed by judgment and foreclosed by Grantee in the same manner as a mechanic's lien, provided, however, that no lien created pursuant to this Preservation Restriction Agreement shall jeopardize the priority of any recorded lien of mortgage or deed of trust given in connection with a promissory note secured by the Property.

BINDING EFFECT; ASSIGNMENT

18. Runs with the Land.

(a) The obligations imposed by this Preservation Restriction Agreement shall be effective in perpetuity. This Restriction shall extend to and be binding upon Grantor and Grantee, their respective successors in interest and all persons hereafter claiming under or through Grantor and Grantee, and the words "Grantor" and "Grantee" when used herein shall include all such persons. Except as provided in Paragraphs 7 and 21, the rights and obligations created or imposed by this Restriction shall be in effect in perpetuity, and shall be deemed as a binding servitude upon the Property. Grantor agrees that this Restriction shall be considered a restriction characterized as "other restrictions held by a governmental body," as that term is used in G.L. c. 184, §26, and thus not subject to the limitations on the enforceability of restrictions in G.L. c. 184, §§26-30.

(b) This Restriction shall extend to and be binding upon Grantor and the Grantee, their respective successors in interest and all persons hereafter claiming under or through Grantor and the Grantee, and the words "Grantor" and "Grantee" when used herein shall include all such persons. Any right, title, or interest herein granted to the Grantee also shall be deemed granted to each successor and assign of the Grantee and each such following successor and assign thereof, and the word "Grantee" shall include all such successors and assigns.

(c) Anything contained herein to the contrary notwithstanding, an owner of the Premises shall have no obligation pursuant to this instrument where such owner shall cease to have any ownership interest in the Premises by reason of a bona fide transfer.

(d) The restrictions, stipulations, and covenants contained in this Restriction shall be incorporated by Grantor, by express reference, in any subsequent deed or other legal instrument by which Grantor

divests itself of either the fee simple title to or any lesser estate in the Premises or any part hereof, including by way of example and not limitation, a lease of all or a portion of the Premises, but excluding any lease with a term of fewer than ninety (90) days.

19. Assignment. Grantee may, at its discretion without prior notice to Grantor, convey, assign or transfer this Preservation Restriction Agreement to a unit of federal, state or local government or to a similar local, state or national organization that is qualified under the Act, as amended, whose purposes, inter alia, are to promote preservation of historical; cultural or architectural resources, provided that any such conveyance, assignment or transfer requires that the Purpose for which this Preservation Restriction Agreement was granted will continue to be carried out.

20. Recording and Effective Date. Grantee shall perform, at its own cost, all acts necessary to achieve the prompt recording of this Preservation Restriction Agreement in the land records of Essex South Registry of Deeds. Grantor and Grantee intend that the restrictions arising under this Preservation Restriction Agreement take effect on the day and year this instrument is executed by Grantor and Grantee.

EXTINGUISHMENT

21.1 Extinguishment. Grantor and Grantee hereby recognize that an unexpected change in conditions affecting the Property may make impossible the continued ownership or use of the Property for the Purpose of this Preservation Restriction Agreement and necessitate extinguishment of this Preservation Restriction Agreement. Such a change in conditions may include, but is not limited to, partial or total destruction of the Building resulting from casualty. An extinguishment must meet all the requirements of the Act for extinguishment, including a public hearing to determine that such extinguishment is in the public interest, and approval by Grantee (or the then holder of this Preservation Restriction Agreement, if it has been assigned pursuant to Section 19), and the Massachusetts Historical Commission if this Preservation Restriction Agreement has been approved by the Massachusetts Historical Commission.

21.2 Condemnation. If all or any part of the Property is taken under the power of eminent domain by public, corporate or other authority, or otherwise acquired by such authority through a purchase in lieu of a taking, Grantor and the Commission shall join in appropriate proceedings at the time of such taking to recover the full value of the Property that is subject to the taking and all incidental and direct damages from the taking. All expenses reasonably incurred by Grantor and the Commission in connection with such taking shall be paid out of the recovered proceeds. Such recovered proceeds shall be paid to Grantor.

INTERPRETATION

22. Interpretation. The following provisions shall govern the effectiveness, interpretation and duration of this Preservation Restriction Agreement:

(a) Any rule of strict construction designed to limit the breadth of restrictions on alienation or use of Property shall not apply in the construction or interpretation of this Preservation Restriction Agreement and this instrument shall be interpreted broadly to effect its Purpose and the transfer of rights and the restrictions on use herein contained.

(b) This instrument is executed in two counterparts, one of which is to be retained by the Grantor and the other, after recording, to be retained by Grantee. In the event of any disparity between the counterparts produced, the recorded counterpart retained by the Grantee shall in all cases govern. Except as provided in the preceding sentence, each counterpart shall constitute the agreement of the parties.

(c) This instrument is made pursuant to the Act, but the invalidity of such Act or any part thereof shall not affect the validity and enforceability of this Preservation Restriction Agreement according to its terms, it being the intent of the parties to agree and to bind themselves, their successors and their assigns to each term of this instrument whether this instrument is enforceable by reason of statute, common law or private agreement either in existence now or at any time subsequent hereto.

(d) Nothing contained herein shall be interpreted to authorize or permit Grantor to violate any ordinance or regulation relating to building materials, construction methods or use. In the event of any conflict between any such ordinance or regulation and the terms hereof Grantor promptly shall notify Grantee of such conflict and shall cooperate with Grantee and the applicable government entity to accommodate the purpose of both this Preservation Restriction Agreement and such ordinance or regulation.

AMENDMENT; SUBORDINATION

23. Amendment. If circumstances arise under which an amendment to or modification of this Preservation Restriction Agreement would be appropriate, Grantor and Grantee may by mutual written agreement jointly amend this Preservation Restriction Agreement, provided that no amendment shall be made that will adversely affect the qualifications of this Preservation Restriction Agreement or the status of Grantee under the Act, or any applicable laws, including any other laws of the Commonwealth of Massachusetts. Any such amendment shall be consistent with the protection of the Preservation Values of the Property and the Purpose of this Preservation Restriction Agreement; shall not affect its stated duration; shall not permit residential development on the Property; shall not permit any private inurement to any person or entity; and shall not adversely impact the overall architectural, historic, natural habitat, and open space values protected by this Preservation Restriction Agreement. Any such amendment shall comply with the provisions of the Act and shall be recorded in the land records of Essex South Registry of Deeds. Nothing in this paragraph shall require Grantor or Grantee to agree to any amendment to consult or negotiate regarding any amendment.

24. Mortgage Subordination. Grantor represents and warrants to Grantee that the Property is not subject to any mortgages, liens, or leases prior in right to this Agreement. Grantor agrees not to enter into or permit other mortgages, liens or leases affecting the Property prior in right to this Preservation Restriction Agreement.

[signature page follows]

DRAFT

IN WITNESS WHEREOF, the parties hereto have set their hands and seals this _____, day of _____, [2024].

GRANTOR:
80 HAVERHILL ROAD, LLC

By:
_____
Jonathan Kearney, Manager

COMMONWEALTH OF MASSACHUSETTS

Essex, ss

On this _____ day of _____, [2024], before me, the undersigned Notary Public, personally appeared Jonathan Kearney who proved to me through satisfactory evidence of identification, which was a New Hampshire Driver's License, to be the person whose name is signed on the preceding or attached document, and acknowledged to me that he signed it voluntarily for its stated purpose as Manager of 80 Haverhill Road, LLC.

_____
Notary Public
My Commission Expires:

[Grantee's signature is on following page]

DRAFT

IN WITNESS WHEREOF, the parties hereto have set their hands and seals this _____, day of _____, [2024].

GRANTEE:
CITY OF AMESBURY,
By its Historical Commission

By:
_____
Name:
Title:

Approved By:

CITY OF AMESBURY
By its Mayor

By: _____
Kassandra Gove, Mayor

[Grantor's signature is on preceding page]

DRAFT

COMMONWEALTH OF MASSACHUSETTS

Essex, ss

On this _____ day of _____, [2024], before me, the undersigned Notary Public, personally appeared _____, member(s) of the Amesbury Historical Commission, as aforesaid, who proved to me through satisfactory evidence of identification, which was _____, to be the person whose name is signed on the preceding or attached document, and acknowledged to me that he/she/they signed it voluntarily for its stated purpose on behalf of the City of Amesbury.

_____
Notary Public
My Commission Expires:

COMMONWEALTH OF MASSACHUSETTS

Essex, ss

On this _____ day of _____, [2024], before me, the undersigned Notary Public, personally appeared _____, who proved to me through satisfactory evidence of identification, which was _____, to be the person whose name is signed on the preceding or attached document, and acknowledged to me that she signed it voluntarily for its stated purpose as Mayor of the City of Amesbury.

_____
Notary Public
My Commission Expires:

DRAFT

EXHIBIT A

Legal Description of the Property

The land in said Amesbury, Essex County, Massachusetts, bounded and described as follows:
A certain parcel of land with the buildings thereon, situated on the Southerly side of Haverhill Road in said Amesbury and shown as Parcel "B" on plan entitled "Plan of Land in Amesbury, Mass., as surveyed for W.E. Begin Scale l" =40', October, 1971, Town Planning & Engineering Associates, Inc.", recorded with Essex South District Registry of Deeds, November 23, 1971, in Plan Book 121, Plan 12.

Meaning and intending to describe and convey the same premises conveyed by deed dated June 29, 2001 and recorded with Southern Essex District Registry of Deeds in Book 17403, Page 563.

DRAFT

EXHIBIT B

Architectural Description of the Property
and FORM B

The form of the large Italianate-style farmhouse consists of the 2 ½-story, side-gable main block; a cross-gabled, two-story ell with clipped bay stepped back on the right side of the main block; two small, telescoping ells extending off the back left corner of the main block; and a partially-enclosed porch with shed roof extending across the left side elevation of the main block. According to the 1989 Building Form, the first ell on the left side was the main kitchen, and the second was a milk house. A portion of the rear (north) wall of the milk house is missing. The two telescoping ells connected to a large barn that is no longer extant.

Most of the house rests on a raised brick foundation which is more exposed as the ground slopes down behind the house. The second one-story rear ell rests on a concrete block foundation, indicating a newer construction date. Most of the front and side elevations are now clad in synthetic clapboard, but most of the rear elevations remain clad in wood clapboards, which was likely the original cladding throughout. The roof is clad in asphalt shingles (likely wood shingles originally), and the roofs of the main block, right side ell and first left side ell all have projecting molded-box cornices with partial returns across the gable ends, and the frieze boards are ornamented with molded modillion blocks on all but the rear elevations. Two red brick chimneys rise from the main roof ridge, and a tall red brick chimney with two corbelled courses rises from the right side ell. The upper courses of brick above the corbelled courses have since been removed from the two chimneys on the main block.

The front elevation of the main block is three bays wide with a centered entrance. The front door is protected by a small, close-pedimented porch whose roof has the same ornamentation as the main roofs. The porch rests on a mortared fieldstone foundation and has modern granite steps. The side walls of the porch are enclosed with wood 2/2 double-hung sash. The front door is flanked by narrow 1/1 double-hung sash. The wood door has horizontally-stacked molded panels and a square window (typical of late-19th and early-20th century doors). The door within the entrance porch has been removed. Fenestration consists primarily of a mix of wood single-glazed and modern thermal 2/2 double-hung sash. The 2/2 window muntin pattern was commonly employed for the Italianate style. Synthetic siding covers much of the window surrounds, but flared lintels are still visible above the upper three windows on the front elevation. The full design on the surrounds is visible in the 1989 Building Form photo (Photo 2). This more ornate window surround does not appear to have been employed on the side and rear elevations. There is a hexagonal bay on the right side elevation, another character-defining feature of the Italianate style. The left side porch has the same roof cornice ornamentation and had windows as of the 1989 Building Form but is now a screen porch. The fenestration pattern on the rear elevation of the main block has been altered.

DRAFT

FORM B – BUILDING

MASSACHUSETTS HISTORICAL COMMISSION
MASSACHUSETTS ARCHIVES BUILDING
220 MORRISSEY BOULEVARD
BOSTON, MASSACHUSETTS 02125

Assessor's Number	USGS Quad	Area(s)	Form Number
85-59	Newburyport West		AME.492

Town/City: AMESBURY

Place: *(neighborhood or village)*: South Amesbury

Address: 80 Haverhill Road

Historic Name: Benjamin and Sarah Huntington House

Uses: Present: Multiple Family Dwelling House

Original: Single Family Dwelling House

Date of Construction: [1877-1884]

Source: Title research, 1884 Essex County Atlas

Style/Form: Italianate

Architect/Builder: Unknown/ Unknown

Exterior Material:

Foundation: Brick, fieldstone, concrete block

Wall/Trim: Synthetic clapboard, wood clapboard/ Wood

Roof: Asphalt shingles

Outbuildings/Secondary Structures:
None

Major Alterations *(with dates)*:
Attached barn demolished (2024)

Condition: Good

Moved: no ☒ yes ☐ **Date:**

Acreage: 0.63 acres

Setting: This property is located on the south side of Haverhill Road in southern Amesbury. This former agricultural landscape is now a busy road with a mix of residential, commercial and industrial uses. The house is set back slightly from the road on a rise. The property is open in front of the house with expanses of lawn and foundation plantings. A gravel driveway leads to the left side of the house. The property slopes back down behind the house.

Photograph

Locus Map

Recorded by: Eric Dray, Preservation Consultant

Organization: 80 Haverhill Road LLC

Date (*month / year*): October 2024

☐ Recommended for listing in the National Register of Historic Places.
If checked, you must attach a completed National Register Criteria Statement form.

Use as much space as necessary to complete the following entries, allowing text to flow onto additional continuation sheets.

ARCHITECTURAL DESCRIPTION:

Describe architectural features. Evaluate the characteristics of this building in terms of other buildings within the community.

The form of this large Italianate-style farmhouse consists of the 2 ½-story, side-gable main block; a cross-gabled, two-story ell with clipped bay stepped back on the right side of the main block; two small, telescoping ells extending off the back left corner of the main block; and a partially-enclosed porch with shed roof extending across the left side elevation of the main block. According to the 1989 Building Form, the first ell on the left side was the main kitchen, and the second was a milk house. A portion of the rear (north) wall of the milk house is missing. The two telescoping ells connected to a large barn that is no longer extant.

Most of the house rests on a raised brick foundation which is more exposed as the ground slopes down behind the house. The second one-story rear ell rests on a concrete block foundation, indicating a newer construction date. Most of the front and side elevations are now clad in synthetic clapboard, but most of the rear elevations remain clad in wood clapboards, which was likely the original cladding throughout. The roof is clad in asphalt shingles (likely wood shingles originally), and the roofs of the main block, right side ell and first left side ell all have projecting molded-box cornices with partial returns across the gable ends, and the frieze boards are ornamented with molded modillion blocks on all but the rear elevations. Two red brick chimneys rise from the main roof ridge, and a tall red brick chimney with two corbelled courses rises from the right side ell. As can be seen from the photo included with the 1989 version of this Building Form (Photo 2), the upper courses of brick above the corbelled courses have since been removed from the two chimneys on the main block.

The front elevation of the main block is three bays wide with a centered entrance. The front door is protected by a small, close-pedimented porch whose roof has the same ornamentation as the main roofs. The porch rests on a mortared fieldstone foundation and has modern granite steps. The side walls of the porch are enclosed with wood 2/2 double-hung sash. The front door is flanked by narrow 1/1 double-hung sash. The wood door has horizontally-stacked molded panels and a square window (typical of late-19th and early-20th century doors). The door within the entrance porch has been removed. Fenestration consists primarily of a mix of wood single-glazed and modern thermal 2/2 double-hung sash. The 2/2 window muntin pattern was commonly employed for the Italianate style. Synthetic siding covers much of the window surrounds, but flared lintels are still visible above the upper three windows on the front elevation. The full design on the surrounds is visible in the 1989 Building Form photo (Photo 2). This more ornate window surround does not appear to have been employed on the side and rear elevations. There is a hexagonal bay on the right side elevation, another character-defining feature of the Italianate style. The left side porch has the same roof cornice ornamentation and had windows as of the 1989 Building Form but is now a screen porch. The fenestration pattern on the rear elevation of the main block has been altered.

HISTORICAL NARRATIVE

Discuss the history of the building. Explain its associations with local (or state) history. Include uses of the building, and the role(s) the owners/occupants played within the community.

This house was built on a 7 ½-acre parcel that ran from Haverhill Road south to Middle Road. Enoch Huntington sold this land in 1877 for $500 to Benjamin F. Huntington (kinship yet to be established).[1] A comparison of Essex County Atlas maps of South Amesbury between 1872 and 1884 shows that the house had been built by 1884 (Figures 2, 3). Benjamin Franklin Huntington (1838-1907) was the son of Jacob and Sarah (Peaslee) Huntington. Benjamin followed in his father's footsteps as a farmer. He was listed in the 1855 census at 17 years of age, still living at home, and both he and his father were listed as farmers. Benjamin

[1] Southern Essex District Registry of Deeds, Book 983/ Page 466.

remained listed as a farmer in all subsequent census records. He married Sarah Elizabeth Sawyer in 1863, and they had three daughters, two of which survived to adulthood.

According to probate records, Benjamin Franklin Huntington left this farm to his grandson, Franklin Huntington Sargent (1899-1938). He married Iva M. Johnson (1899-ca. 1945) in 1921. As of the 1930 census, they were living on Haverhill Road, and he was working as a retail merchant for an ice company. After his death in 1938, she continued to live here and in 1942, she married Frank H. Merrill (1899-1976).

Frank Merrill (1899-1976) continued to live here following Iva's death, and he was listed as a farmer in the 1950 census. In 1965, he sold the property, now 3 acres, to Irene and Joseph H. Raymond of Amesbury.[2] In 1971, the next owners, Wilfred and Ruth Begin, subdivided the parcel into three lots, with the farmhouse on Lot B (Figure 4).[3] This property (Lot B) has changed hands numerous times since then, sometimes sold as one of number of parcels. Most recently, in 2023, the LJM Real Estate Nominee Trust sold Lot B to 80 Haverhill Road, LLC.[4]

BIBLIOGRAPHY and/or REFERENCES

Essex County Atlas. Beers, D. G. (Amesbury, South Amesbury), 1872.
Essex County Atlas. Geo. H. Walker & Co., 1884.
Southern Essex District Registry of Deeds
www.ancestry.com - Vital records

Photo 2. View looking southeast.

[2] Southern Essex District Registry of Deeds, Book 5278/ Page 152.
[3] Southern Essex District Registry of Deeds, Plan Book 121/ Page 12.
[4] Southern Essex District Registry of Deeds, Book 41666/ Page 459.

Photo 3. View looking southwest.

Photo 4. View looking north.

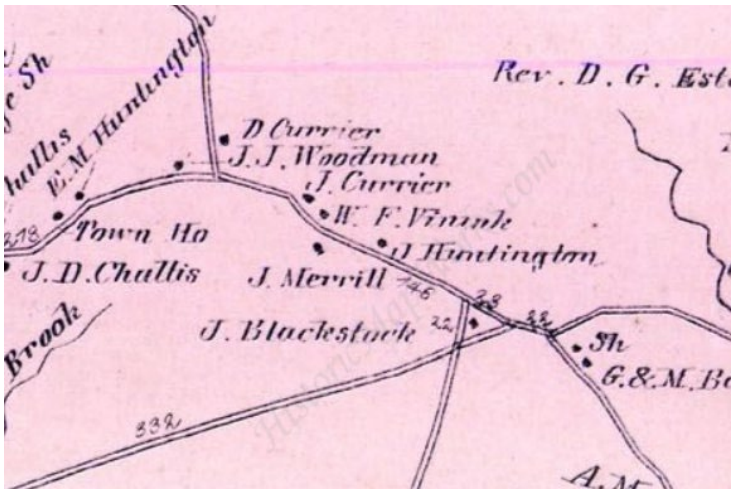

Figure 2. Detail of 1872 Essex County Atlas.

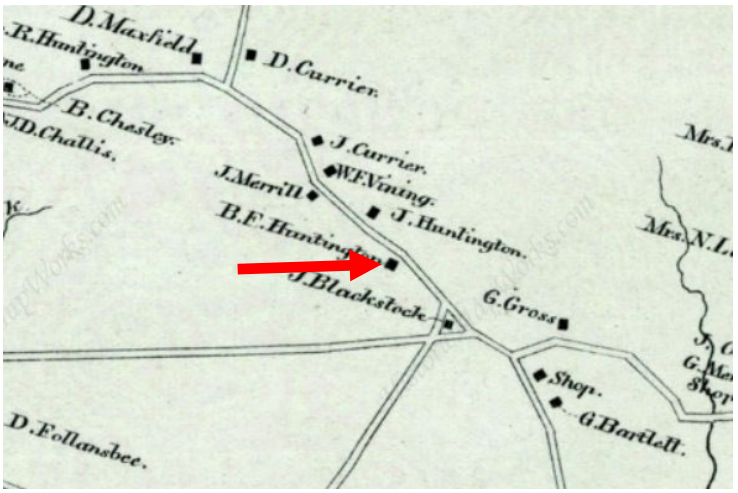

Figure 3. Detail of 1884 Essex County Atlas (arrow added).

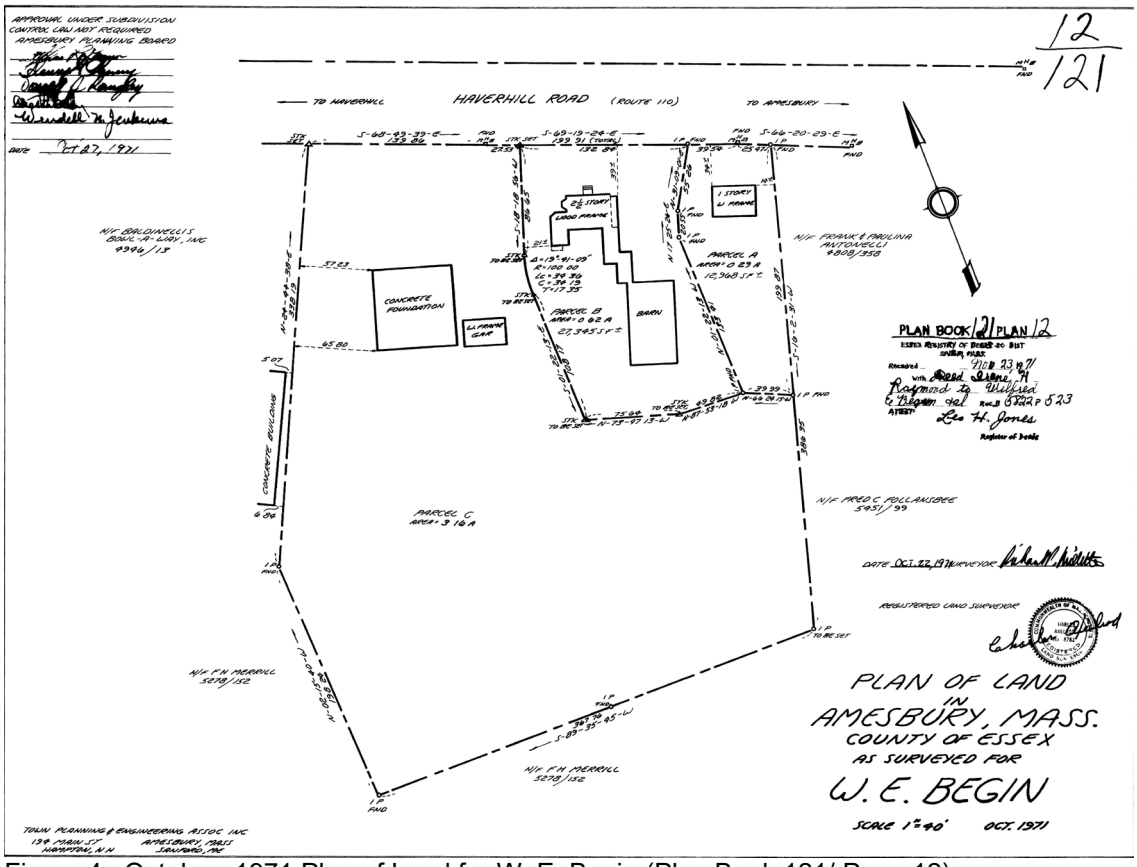

Figure 4. October, 1971 Plan of Land for W. E. Begin (Plan Book 121/ Page 12).

EXHIBIT C

Photographs of the Building

[TO BE COMPLETED]

DRAFT

EXHIBIT D

<u>Architect's Drawings of the Building</u>

project:

80 HAVERHILL RESIDENCES

80 Haverhill Road
Amesbury, MA

architect:

GRAF ARCHITECTS
2 Liberty Street
Newburyport, MA
01950
T. 978 499 9442
www.grafarch.com

title:

PROPOSED
Exterior Elevations

SCALE: 1/8" = 1'-0"
23 october 2024

A05

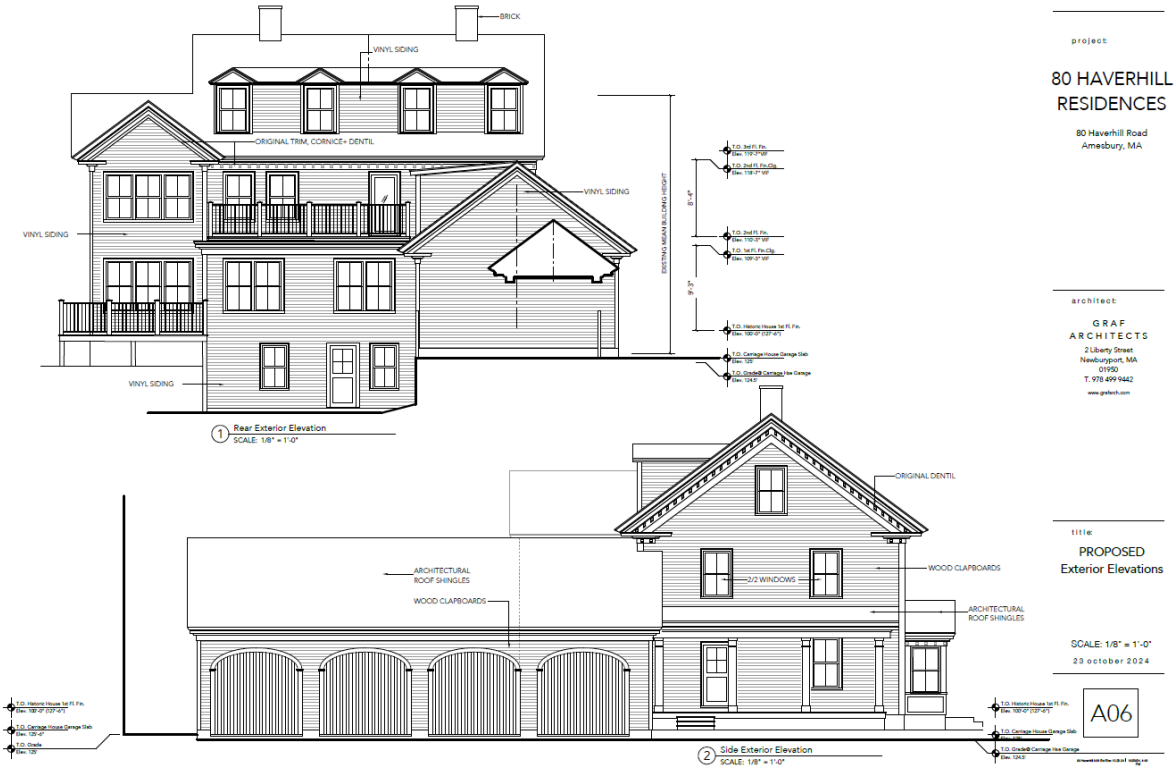
BRICK
VINYL SIDING
ORIGINAL TRIM, CORNICE+ DENTIL
VINYL SIDING
VINYL SIDING
VINYL SIDING
EXISTING MAXIMUM BUILDING HEIGHT
8'-4"
9'-3"
1 Rear Exterior Elevation
SCALE: 1/8" = 1'-0"
ORIGINAL DENTIL
ARCHITECTURAL ROOF SHINGLES
WOOD CLAPBOARDS
2/2 WINDOWS
WOOD CLAPBOARDS
ARCHITECTURAL ROOF SHINGLES
2 Side Exterior Elevation
SCALE: 1/8" = 1'-0"
project:
80 HAVERHILL RESIDENCES
80 Haverhill Road
Amesbury, MA
architect:
GRAF ARCHITECTS
2 Liberty Street
Newburyport, MA
01950
T. 978 499 9442
www.grafarch.com
title:
PROPOSED
Exterior Elevations
SCALE: 1/8" = 1'-0"
23 october 2024
A06

DRAFT

Restriction Guidelines

The purpose of these Restriction Guidelines is to clarify the terms of this Historic Preservation Restriction that deal with maintenance and alteration to the Building. Under Paragraph 3, prior permission from the Grantee is required for any Minor Maintenance that is reasonably expected to materially change the appearance, materials, colors or workmanship from that existing prior to the maintenance and for any Major Maintenance. Minor Maintenance that is part of ordinary maintenance and repair and does not materially change the appearance, materials, colors or workmanship from that existing prior to the maintenance does not require Grantee review and approval.

In an effort to explain what constitutes Minor Maintenance and Major Maintenance, the following list is provided. The list is by no means comprehensive. It is a sampling of common structural alterations.

PAINT
Minor: Exterior hand scraping and repainting of non-decorative and non-significant surfaces as part of periodic maintenance.
Major: Painting or fully stripping exterior decorative surfaces or distinctive stylistic features, including exterior murals, stenciling, ornamental woodwork, stone, and decorative or significant original plaster.

WINDOWS AND DOORS
Minor: Regular maintenance including caulking, painting, and necessary reglazing. Repair or in- kind replacement of existing individual decayed window parts.
Major: Wholesale replacement of units; change in fenestration or materials; alteration of profile or setback of windows. The addition of storm windows is also considered a major change; however, with notification it is commonly acceptable.

EXTERIOR
Minor: Spot repair of existing cladding and roofing including in-kind replacement of clapboard, shingles, slates, etc.
Major: Large scale repair or replacement of cladding or roofing. Change involving inappropriate removal or addition of materials or building elements (i.e., removal of chimney or cornice detailing; installation of architectural detail which does not have a historical basis); altering or demolishing building additions; spot repointing of masonry. Structural stabilization of the property is also considered a major alteration.

LANDSCAPING/OUTBUILDINGS
Minor: Routine maintenance of outbuildings and landscape including lawn mowing, pruning, planting, painting, and repair.
Major: Moving or subdividing buildings or property; altering of property; altering or removing significant landscape features such as gardens, vistas, walks, plantings, walls, fences, and ground disturbances affecting archaeological resources.

Changes classified as Major Maintenance are not necessarily unacceptable. Under the Historic Preservation Restriction, such changes must be reviewed by the Grantee in order to assess their impact on the historic integrity of the Property, Building, and other structures.

It is the responsibility of the Grantor to notify Grantee in writing when any Minor Maintenance that is reasonably expected to materially change the appearance, materials, colors or workmanship from that existing prior to the maintenance or any Major Maintenance is contemplated. Substantial alterations may necessitate review of plans and specifications.

DRAFT

The intent of this Historic Preservation Restriction is to enable the Commission to review proposed alterations and assess their impact on the integrity of the Property, the Building, and other structures, not to preclude future change. The Commission will attempt to work with the Grantor to develop mutually satisfactory solutions which are in the best interests of the Property.

DRAFT

Attachment:

Site Plan Analysis under XI.C

SITE PLAN APPROVAL

Although not required because the "granting of a HP-SP shall also constitute approval and compliance with Site Plan Review requirements outlined in Section XI.C", the Applicant satisfies the requirements of section XI-C:

1. The Site Plan complies with Development and Performance Standards contained in section 8.

   As you can see from the attached plan the proposal complies with the performance standards.

2. The Site Plan minimizes traffic and safety impacts of the proposed development on adjacent highways or roads, and maximizes the convenience and safety of vehicular and pedestrian movement with the site.

   As indicated in the traffic memo attached hereto the project will result in "a slight increase in trips during the AM and PM peak hours (2 additional trips). The increase of 27 daily trips is de minimus and will have no impact on the traffic flow in Haverhill Road. Additionally, ample parking space is provided for residents." The proposal uses the same ingress/egress as the existing four-unit use.

3. The proposed development, to the extent feasible:
   a. Is integrated into the existing landscape
   b. Minimizes adverse environmental impacts on such features as wetlands, floodplains, and aquifer recharge areas
   c. Minimizes obstructions of scenic views from publicly accessible locations
   d. Preserves unique natural or historic features
   e. Minimizes tree, vegetation and soil removal and grade changes.
   f. Maximizes open space retention
   g. Screens objectionable features from nearby properties and roadways
   h. Minimizes noise and odors associated with commercial. Industrial activities

   Each of the foregoing criteria are met as you can see from the site plan. The existing main structure remains and the barn will be constructed in a similar footprint of the previous barn. The Applicant worked hand in hand with the City to go the extra mile to not create too much impervious surface for the sole purpose of providing parking. Here the Applicant has gone to the expense of providing parking under the new barn structure and enclose parking in between the two structures by mimicking the prior milk house connection between the house and the barn.

4. The architectural design of the proposed development is in harmony with the vernacular architecture of the City.

   The Italianate Structure will be restored with appropriate materials and the new barn will complement it in architectural style. The style is appropriate for the City.

5. The proposed development is served with adequate water supply and waste disposal systems and will not place excessive demands on City services and infrastructure.

   City water and sewer serves the site. There will be no excessive demands on those services.

6. The Site Plan shows or includes adequate measures to prevent pollution of surface or groundwater, to minimize erosion and sediments, and to prevent changes in groundwater levels, increased run off and potential for flooding.

   The plan shows that stormwater will be managed and addressed on site. Also, as indicated in the Stormwater Management Report, the "proposed stormwater management system for the project includes catch basins, proprietary separators and subsurface infiltration structures. The catch basins and Contech CDS units will remove suspended solids prior to discharging to the infiltration areas. The infiltration areas will provide stormwater recharge to the groundwater and mitigate peak runoff rates to ensure the post-development runoff rates will be less than or equal to the pre-development rates. Roof drywells are also proposed to recharge roof runoff to the groundwater."

Attachment:

Waiver Request List under XI.C

Mead, Talerman & Costa, LLC
Attorneys at Law

30 Green Street
Newburyport, MA 01950
Phone 978.463.7700
Fax 978.463.7747

www.mtclawyers.com

November 8, 2024

By Electronic Submission and Hand

Pascal Rettig, Chair
Amesbury Planning Board
City of Amesbury
62 Friend Street,
Amesbury, Massachusetts 01913

Re: 80 Haverhill Road – Site Plan Review Waiver Requests

Dear Chair and Members of the Board:

Reference is made to the above-captioned matter. In that connection, this firm represents 80 Haverhill Road, LLC (the "Applicant"), relative to an application for an Historic Preservation Special Permit under section XI.J2 and Site Plan Review under section XI.C[1] of the Amesbury Zoning Ordinance ("Ordinance") for multi-family housing at 80 Haverhill Road, Amesbury, MA (Assessor's Map 85, Lot 59) (the "Property"). Although not required because the "granting of a HP-SP shall also constitute approval and compliance with Site Plan Review requirements outlined in Section XI.C", the Applicant submits the following waiver requests under Section XI.C.5 of the Ordinance:

Request: Waive the requirement for a landscaping plan prepared by a registered landscape architect under §XI.C.5.h.

Reasoning: The Applicant is submitting a landscaping plan prepared by the Architect for the proposal. As stated in the Applicant's other materials, the project has been developed with close participation from the City. Further, the Property requires a fairly simple plan and the submitted plan sufficiently shows the placement of vegetation.

Request: Waive the requirement to show traffic generation on site plans under §XI.C.5.l

Reasoning: The Applicant is concurrently submitting a traffic memorandum.

[1] Note, XI.J2 approval satisfies the requirements of XI.C, but we are submitting an analysis of the Site Plan requirements as an attachment.

Millis Office
730 Main Street, Suite 1F
Millis, MA 02054
Phone/Fax 508.376.8400

New Bedford Office
227 Union Street, Suite 606
New Bedford, MA 02740

Request: Waive the requirement to exterior colors on elevations under §XI.C.5.m

Reasoning: The Applicant is indicates the materials to be used on the elevations and will select appropriate colors for the buildings.

Respectfully submitted,
80 Haverhill Road, LLC
By its Attorney,

LLM by BJR

Lisa L. Mead
Benjamin J. Roberts

cc: Client

Attachments