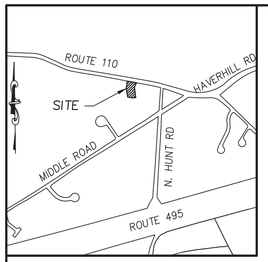

LOCUS MAP
1"=1000'

BASIS OF BEARINGS
MASSACHUSETTS STATE PLANE
COORDINATE SYSTEM
NAD-83

OWNER OF RECORD
80 HAVERHILL ROAD, LLC
BK. 41666 PG. 459

PLAN REFERENCES
PLAN BOOK 121 PLAN 12
1926 S.H.L.O.

SITE PLAN
FOR
80 HAVERHILL ROAD
IN
AMESBURY, MA

NOVEMBER 2024

CITY OF AMESBURY
OFFICE OF THE CITY OF THE CLERK

THIS IS TO CERTIFY THAT ON _____
I RECEIVED FROM THE AMESBURY PLANNING BOARD CERTIFICATION OF ITS APPROVAL OF THIS PLAN AND THAT DURING THE (20) TWENTY DAYS NEXT FOLLOWING I HAVE RECEIVED NO NOTICE OF ANY APPEAL FROM SAID DECISION.

_____
CLERK DATE

FOR REGISTRY USE

AMESBURY PLANNING
BOARD APPROVAL

_____
_____
_____
_____
_____
_____

_____
DATE

PLAN INDEX

SHEET NO.	TITLE
C1	COVER SHEET
C2	GENERAL NOTES & LEGEND
C3	BOUNDARY PLAN
C4	EXISTING CONDITIONS
C5	SITE PLAN
C6	GRADING AND DRAINAGE PLAN
C7	UTILITIES PLAN
C8	EROSION AND SEDIMENTATION PLAN
C9-C11	CONSTRUCTION DETAILS

ZONING TABLE

ADDRESS – ASSESSORS MAP 85 LOT 59 ZONING DISTRICT R40			
	REQUIRED	EXISTING	PROPOSED
LOT AREA:	40,000 S.F.	27,332 S.F.	27,332 S.F.**
LOT FRONTAGE:	140 FT.	132.84 FT.	132.84 FT.**
FRONT SETBACK:	40 FT.	36.6 FT.	36.6 FT.**
SIDE SETBACK:	25 FT.	16.7 FT.	17.2 FT.**
REAR SETBACK:	50 FT.	79.1 FT.	42.6 FT.**
BLDG HEIGHT:	35 FT.	29.6'*	29.6'*
MAX. STORIES	2.5	2	4**
MAX. BLDG AREA:	15%	13.5%	20.5%**
MIN OPEN SPACE:	50%	61.5%	43.5%**

*THE VERTICAL DISTANCE FROM THE AVERAGE FINISH GRADE OF THE ADJACENT GROUND TO THE MEAN LEVEL OF THE HIGHEST GABLE OR SLOPE OF A HIP ROOF. (SEE ARCHITECTURAL PLANS FOR DETAILS)

**WAIVER REQUESTED

WAIVER REQUESTS:

THE FOLLOWING WAIVERS ARE REQUESTED FROM THE CITY OF AMESBURY'S ZONING REGULATIONS UNDER THE HISTORIC PRESERVATION SPECIAL PERMIT SECTION XI.J:

IN ORDER TO PERMIT CONVERSION OF EXISTING HISTORIC BUILDINGS OR STRUCTURES, THE BOARD MAY MODIFY THE STANDARDS IN TABLE OF DENSITY AND DIMENSIONAL REGULATIONS, WITH REGARDS TO MINIMUM LOT AREA, LOT FRONTAGE, FRONT, SIDE AND REAR SETBACKS TO ALLOW RESIDENTIAL USES IN AN EXISTING OR PROPOSED PRINCIPAL OR ACCESSORY STRUCTURE.

1) SECTION VI DIMENSIONAL AND DENSITY REGULATIONS:
THE MINIMUM LOT AREA WITHIN THE R-40 DISTRICT IS 40,000 S.F., THE EXISTING LOT AREA IS 27,332 S.F.

2) SECTION VI DIMENSIONAL AND DENSITY REGULATIONS:
THE MINIMUM LOT FRONTAGE WITHIN THE R-40 DISTRICT IS 140 FT., THE EXISTING LOT HAS 132.84 FT. OF FRONTAGE.

3) SECTION VI DIMENSIONAL AND DENSITY REGULATIONS:
THE REQUIRED FRONT SETBACK WITHIN THE R-40 DISTRICT IS 40 FT., THE PROPOSED FRONT SETBACK IS 36.6 FT.

4) SECTION VI DIMENSIONAL AND DENSITY REGULATIONS:
THE REQUIRED SIDE SETBACK WITHIN THE R-40 DISTRICT IS 25 FT., THE PROPOSED SIDE SETBACK IS 17.2 FT.

5) SECTION VI DIMENSIONAL AND DENSITY REGULATIONS:
THE REQUIRED REAR SETBACK WITHIN THE R-40 DISTRICT IS 50 FT., THE PROPOSED REAR SETBACK IS 42.6 FT.

6) SECTION VI DIMENSIONAL AND DENSITY REGULATIONS:
THE MAXIMUM BUILDING AREA WITHIN THE R-40 DISTRICT IS 15%, THE PROPOSED BUILDING AREA IS 20.5%.

7) SECTION VI DIMENSIONAL AND DENSITY REGULATIONS:
THE MAXIMUM NUMBER OF STORIES WITHIN THE R-40 DISTRICT IS 2.5, THE PROPOSED BUILDING IS 4 STORIES (INCLUDING BASEMENT/GARAGE).

8) SECTION VI DIMENSIONAL AND DENSITY REGULATIONS:
THE MINIMUM OPEN SPACE WITHIN THE R-40 DISTRICT IS 50%, THE PROPOSED OPEN SPACE IS 43.5%.

9) SECTION VIII OFF STREET PARKING AND LOADING REGULATIONS:
THE REQUIRED AISLE WIDTH BETWEEN PARKING SPACES FOR TWO WAY TRAFFIC IS 24'. ONE OF THE PROPOSED PARKING SPACES PROVIDES 20'.

10) SECTION VIII OFF STREET PARKING AND LOADING REGULATIONS:
ALL DRIVEWAYS IN "R" DISTRICTS SHALL BE PLACED A MINIMUM OF 5' FROM ANY PROPERTY LINE. THE PROPOSED DRIVEWAY IS 3.5' FROM THE PROPERTY LINE.

11) WAIVER FROM SECTION 8.04A.1OF THE AMESBURY SUBDIVISION RULES AND REGULATIONS REQUIRING THE USE OF RCP PIPE FOR THE DRAINAGE SYSTEM. HDPE PIPE IS PROPOSED.

12) WAIVER FROM SECTION 8.04A.1 OF THE AMESBURY SUBDIVISION RULES AND REGULATIONS REQUIRING A MINIMUM OF 3 FEET OF COVER OVER DRAINAGE PIPES. LESS THAN 2.7 FEET OF COVER IS PROPOSED AT CB#4.

GRAPHIC SCALE
20 0 10 20 40 80
(IN FEET)
1 inch = 20'

COMMONWEALTH OF MASSACHUSETTS
JAMES T. MELVIN
CIVIL
No. 52965
REGISTERED PROFESSIONAL ENGINEER

PREPARED FOR
80 HAVERHILL ROAD, LLC
80 HAVERHILL ROAD
AMESBURY, MA

NO.	DATE	DESCRIPTION	BY
1	12/3/24	EDITS FROM PRELIM. HEARING	S.R.C.

MEI
MILLENNIUM ENGINEERING, INC.
ENGINEERING AND LAND SURVEYING
62 ELM ST. SALISBURY, MA 01952 (978) 463-8980
13 HAMPTON RD. EXETER, NH 03833 (603) 778-0528

SCALE: 1"=20' CALC. BY: S.R.C.
DATE: NOV. 8, 2024 CHKD. BY: E.W.B.
PROJECT: M234276

SITE PLAN
IN
AMESBURY, MA
AT
80 HAVERHILL ROAD

COVER SHEET

SHEET: C-1

LEGEND

EXISTING	PROPOSED	
□	■CB	CATCH BASIN (OR GUTTER INLET, OR LEACHING BASIN)
	■CBCI (OR GICI)	CATCH BASIN (OR GUTTER INLET) WITH CURB INLET
		CURB (OR BERM) – TYPE NOTED
		EDGE OF ROAD
—160—	162	CONTOUR
x 7.3	100.00	SPOT GRADE
Ⓢ	Ⓢ	SEWER MANHOLE
Ⓓ	Ⓓ	DRAINAGE MANHOLE
GV		GAS GATE
WV		WATER GATE
		HYDRANT
○ FA	● FA	FIRE ALARM BOX
		POST MOUNTED PEDESTRIAN LIGHT
		UTILITY POLE
— D —	— D —	DRAIN PIPE
— S —	— S —	SEWER MAIN
— FM —	— FM —	SEWER FORCE MAIN
— UD —	— UD —	UNDERDRAIN
— W —	— W —	WATER MAIN
	— E/T —	ELECTRIC/TELEPHONE DUCT
□ MB	■MB	MAIL BOX
		HIGHWAY GUARD (TYPE NOTED)
— x — x —	— x — x —	FENCE (SIZE AND TYPE NOTED)
		EASEMENT LINE
PL	PL	PROPERTY LINE
		100 FT BUFFER ZONE
		TEST PIT
	— SF —	SILTATION BARRIER/LIMIT OF WORK
		WETLAND

SURVEY

120	WETLAND DELINEATION FLAG
C.B.	CONCRETE BOUND
S.B.	STONE BOUND
D.H.	DRILL HOLE
PK	MASONRY NAIL
I.P.	IRON PIPE
I ROD	IRON ROD
FND.	FOUND
N/FND.	NOT FOUND
0 / 00	ASSESSORS MAP AND PARCEL

GENERAL NOTES

1. THE CONTRACTOR SHALL REPORT TO THE OWNER AND ENGINEER ANY SIGNIFICANT VARIATIONS IN EXISTING SITE CONDITIONS. ANY PROPOSED REVISIONS TO THE WORK SHALL NOT BE UNDERTAKEN UNTIL REVIEWED AND APPROVED BY THE OWNER AND REGULATING CITY AND/OR STATE AGENCIES.
2. THE CONTRACTOR SHALL INSTALL ALL SYSTEM COMPONENTS IN ACCORDANCE WITH THE MANUFACTURER'S SPECIFICATIONS AND ALL APPLICABLE ELECTRICAL, PLUMBING, AND SANITARY CODES.
3. ALL WORK SHALL CONFORM TO; THE CITY OF AMESBURY SUBDIVISION RULES AND REGULATIONS, THE CITY OF AMESBURY CONSTRUCTION STANDARDS AND DETAILS, THE WETLANDS PROTECTION ACT (310 CMR 10.00), THE ORDER OF CONDITIONS ISSUED BY THE AMESBURY CONSERVATION COMMISSION; NPDES CONSTRUCTION GENERAL PERMIT; AND THESE PLANS.
4. THE LOCATION OF ALL UTILITIES, AS SHOWN ON THESE PLANS, ARE BASED UPON PLANS AND RECORD INFORMATION PROVIDED BY MUNICIPAL AND PRIVATE UTILITY COMPANIES AND ARE CONSIDERED APPROXIMATE BOTH AS TO SIZE AND LOCATION. NO WARRANTY IS MADE AS TO THE ACCURACY OF THESE LOCATIONS OR THAT ALL UTILITIES ARE SHOWN. THE CONTRACTOR SHALL NOT RELY ON THESE PLANS FOR SUCH INFORMATION AND SHALL MAKE EXAMINATIONS IN THE FIELD BY VARIOUS AVAILABLE RECORDS, UTILITY COMPANIES AND INDIVIDUALS, AS TO THE LOCATION OF ALL SUBSURFACE STRUCTURES.
5. THE CONTRACTOR SHALL VERIFY THE LOCATION OF EXISTING UTILITIES BY CONTACTING "DIG–SAFE" AT LEAST 72 HOURS PRIOR TO ANY EXCAVATION. DIG–SAFE TELEPHONE NUMBER: 1–888–344–7233.
6. THE CONTRACTOR SHALL FIELD CHECK ALL DIMENSIONS AND ELEVATIONS BEFORE PROCEEDING WITH THE NEW WORK. HE/SHE SHALL EXCAVATE TO VERIFY PERTINENT DRAINAGE INVERTS AND POTENTIAL UTILITY CONFLICTS. ANY DISCREPANCIES SHALL BE REPORTED TO THE OWNER IMMEDIATELY.
7. ALL EXISTING STRUCTURES AND SURFACES, UNLESS OTHERWISE SHOWN, SHALL BE COMPLETELY REMOVED FROM THE AREAS OF WORK. ALL TREES SCHEDULED FOR REMOVAL SHALL BE FIELD MARKED AND APPROVED FOR REMOVAL BY THE OWNER PRIOR TO CUTTING OPERATIONS.
8. THE CONTRACTOR IS RESPONSIBLE FOR INITIATING, MAINTAINING AND SUPERVISING ALL SAFETY PRECAUTIONS AND PROGRAMS IN CONNECTION WITH THE WORK. THE CONTRACTOR SHALL TAKE ALL NECESSARY PRECAUTIONS FOR THE SAFETY OF THE PUBLIC, EMPLOYEES, AND ALL OTHER PERSONS ASSOCIATED WITH THE PROJECT. HE/SHE SHALL COORDINATE AND BE RESPONSIBLE FOR ALL SAFETY SIGNING, BARRIERS AND TEMPORARY PAVEMENT MARKINGS NECESSARY TO PROVIDE A SMOOTH AND PROPER TRANSITION FOR TRAFFIC FLOW.
9. IF REQUIRED BY THE CONTRACTOR, OVERHEAD LINES SHALL BE RELOCATED BY THE UTILITY COMPANY AT THE CONTRACTORS EXPENSE.
10. AREAS OUTSIDE THE LIMITS OF WORK (EROSION CONTROL/SILT FENCE LOCATIONS) DISTURBED BY THE CONTRACTOR DURING CONSTRUCTION SHALL BE RESTORED TO THEIR ORIGINAL CONDITION AT THE EXPENSE OF THE CONTRACTOR.
11. ALL SEWER MAINS SHALL BE INSTALLED AT LEAST 10 FEET HORIZONTALLY FROM PROPOSED WATER MAINS AND SHALL MAINTAIN 5 FEET OF COVER OVER THE TOP OF THE PIPING, UNLESS OTHERWISE SHOWN OR APPROVED.
12. ALL WATER MAINS SHALL BE INSTALLED WITH A MINIMUM OF 5 FEET OF COVER OVER THE TOP OF THE PIPE, UNLESS OTHERWISE SHOWN OR APPROVED.
13. WHENEVER SEWER MAINS MUST CROSS WATER MAINS, THE SEWER SHALL BE CONSTRUCTED AS FOLLOWS; 6" THICK CONCRETE ENCASEMENTS EXTENDING 10' EITHER SIDE OF THE CROSSING.
14. THE CONTRACTOR IS RESPONSIBLE FOR MAINTAINING EROSION AND/OR SEDIMENT CONTROLS DURING CONSTRUCTION. HE/SHE SHALL INSPECT CONTROLS WEEKLY AND AFTER ALL STORM EVENTS. REPAIRS, IF REQUIRED, SHALL BE MADE IMMEDIATELY.
15. 14 DAYS PRIOR TO COMMENCING CONSTRUCTION, THE OWNER/DEVELOPER SHALL PRESENT A CONSTRUCTION SCHEDULE TO THE THE CITY OF AMESBURY PLANNING BOARD.
16. TWO HARD COPIES OF AS–BUILT DRAWINGS SHALL BE SUBMITTED TO THE THE CITY OF AMESBURY PLANNING BOARD UPON COMPLETION OF THE PROJECT. AS–BUILTS SHALL INCLUDE ALL LANDBASE AND UTILITIES INFORMATION.
17. ONSITE BURIAL OF STUMPS OR ANY OTHER DEBRIS IS PROHIBITED.
18. ELEVATIONS ARE BASED UPON 1988 NAVD DATUM.

FOR REGISTRY USE

AMESBURY PLANNING BOARD APPROVAL

DATE

CITY OF AMESBURY
OFFICE OF THE CITY OF THE CLERK

THIS IS TO CERTIFY THAT ON _____ I RECEIVED FROM THE AMESBURY PLANNING BOARD CERTIFICATION OF ITS APPROVAL OF THIS PLAN AND THAT DURING THE (20) TWENTY DAYS NEXT FOLLOWING I HAVE RECEIVED NO NOTICE OF ANY APPEAL FROM SAID DECISION.

CLERK DATE

MATERIAL NOTES

ALL MATERIALS OF THE ELEMENTS IN THE SITE PLAN MUST CONFORM TO THE FOLLOWING STANDARDS:

1. COMMONWEALTH OF MASSACHUSETTS DEPARTMENT OF TRANSPORTATION STANDARD SPECIFICATIONS FOR HIGHWAYS AND BRIDGES (LATEST EDITION)
2. 521 CMR RULES AND REGULATIONS OF THE ARCHITECTURAL ACCESS BOARD (AAB) AND THE AMERICANS WITH DISABILITIES ACT (ADA)
3. SPECIFICATIONS BY THE CITY OF AMESBURY AS SET FORTH BY DESIGN STANDARDS IN THE PLANNING BOARD RULES AND REGULATIONS GOVERNING THE SUBDIVISION OF LAND, DATED NOVEMBER 1, 2013
4. UTILITIES INSTALLED PER CITY OF AMESBURY WATER DIVISION CONSTRUCTION DETAILS

PAVEMENT NOTES

1.) ALL STUMPS, ROCKS AND LEDGE WITHIN THE LIMITS OF THE PROPOSED PAVED WAY SHALL BE REMOVED. ALL LEDGE SHALL BE REMOVED TO A MINIMUM DEPTH OF 2' BELOW FINISHED PAVEMENT GRADE.
2.) PAVEMENT SHALL NOT BE CONSTRUCTED DURING FREEZING WEATHER OR ON WET OR FROZEN SUBGRADE.
3.) GRADING AND ROLLING SHALL BE REQUIRED TO PROVIDE A SMOOTH, EVEN, AND UNIFORM COMPACTED BASE WHICH IS COMPACTED TO A MINIMUM DRY DENSITY OF 95 PERCENT.
4.) ALL UNSUITABLE MATERIAL SHALL BE EXCAVATED AND REPLACED WITH SATISFACTORY MATERIAL AND BROUGHT UP TO GRADE WITH GRAVEL BORROW CONTAINING NO STONES GREATER THAN 6" DIAMETER.
5.) AT ALL TIMES DURING CONSTRUCTION, THE SUB–GRADE AND ALL DITCHES SHALL BE CONSTRUCTED AND MAINTAINED SO THAT THE TRACK WILL EFFECTIVELY BE DRAINED.
6.) THE CONTRACTOR SHALL REFER TO THE AMESBURY PLANNING BOARD RULES AND REGULATIONS GOVERNING THE SUBDIVISION OF LAND.

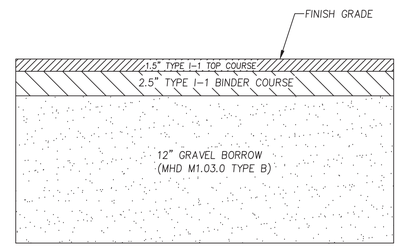

PAVEMENT DETAIL N.T.S.

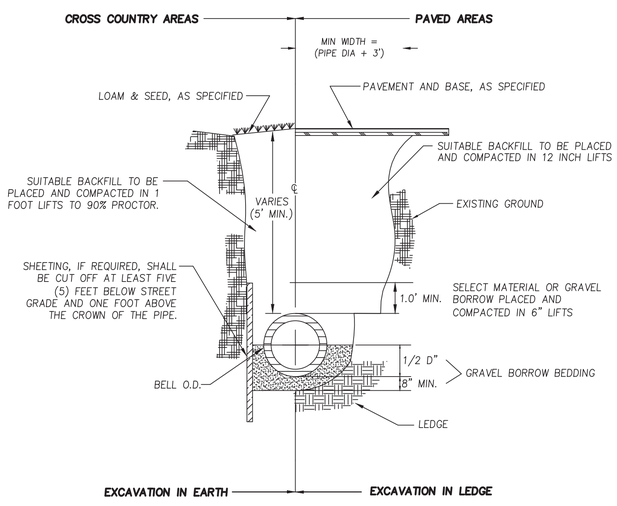

TYPICAL TRENCH DETAIL N.T.S.

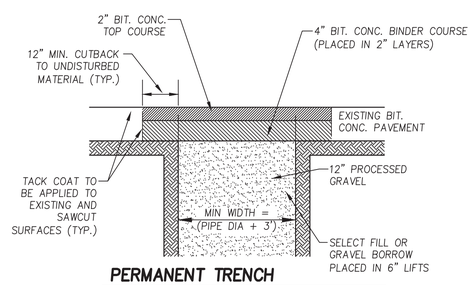

PERMANENT TRENCH PATCH DETAIL N.T.S.

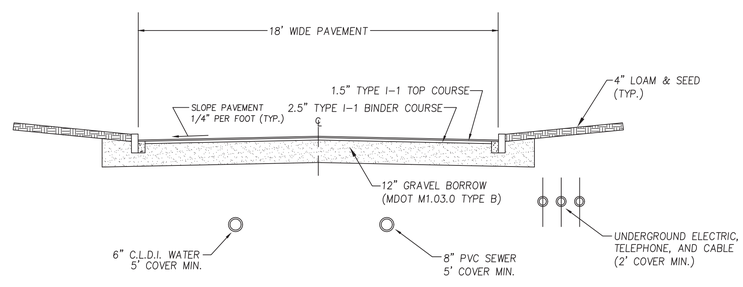

DRIVEWAY CROSS–SECTION N.T.S.

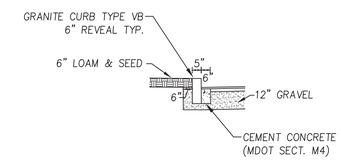

TYPICAL GRANITE CURBING INSTALLATION DETAIL N.T.S.

GRAPHIC SCALE
20 0 10 20 40 80
(IN FEET)
1 inch = 20'

COMMONWEALTH OF MASSACHUSETTS JAMES T. MELVIN CIVIL No. 32963 PROFESSIONAL ENGINEER

PREPARED FOR
80 HAVERHILL ROAD, LLC
80 HAVERHILL ROAD
AMESBURY, MA

NO.	DATE	DESCRIPTION	BY
1	12/3/24	REVISIONS FROM PRELIM. HEARING	S.R.C.

MEI MILLENNIUM ENGINEERING, INC.
ENGINEERING AND LAND SURVEYING
62 ELM ST. SALISBURY, MA 01952 (978) 463–8980
13 HAMPTON RD. EXETER, NH 03833 (603) 778–0528

SCALE: 1"=20' CALC. BY: S.R.C.
DATE: NOV. 8, 2024 CHKD. BY: E.W.B.
PROJECT: M234276

SITE PLAN
IN
AMESBURY, MA
AT
80 HAVERHILL ROAD

GENERAL NOTES & LEGEND
SHEET: C–2

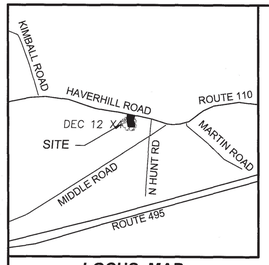

LOCUS MAP
1" = 1,500'

FOR REGISTRY USE ONLY

I CERTIFY THAT THIS PLAN CONFORMS TO THE RULES AND REGULATIONS OF THE REGISTER OF DEEDS.

PRESTON BROWN — DATE 10/30/24

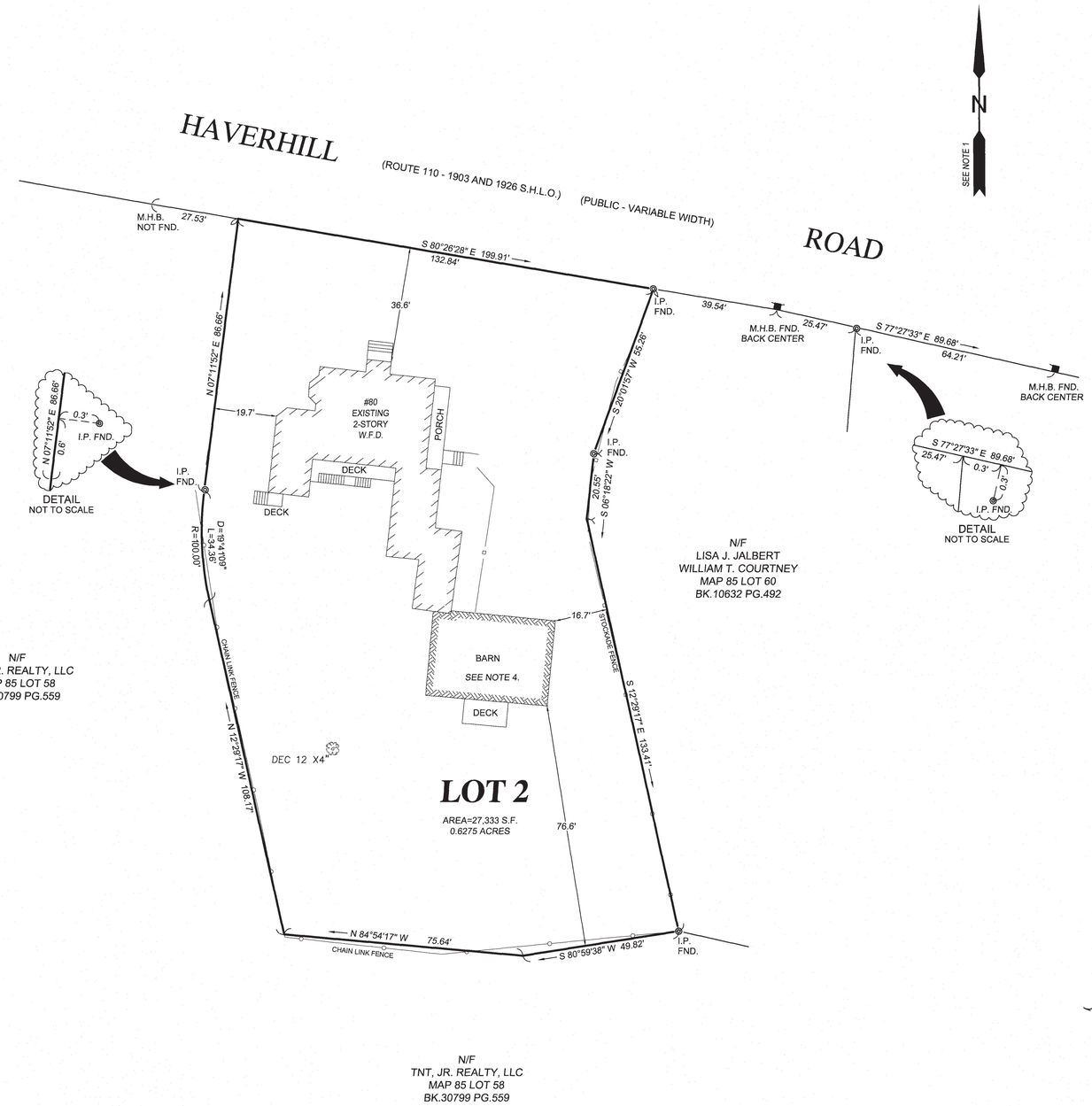

KEY REFERENCE DEEDS

1. BOOK 41666 PAGE 459 L.J.M. REAL ESTATE NOMINEE TRUST TO 80 HAVERHILL ROAD, LLC DATED 7/18/23 RECORDED SOUTH ESSEX REGISTRY OF DEEDS.

KEY REFERENCE PLANS

1. PLAN OF LAND AS SURVEYED FOR W. E. BEGIN PREPARED BY TOWN PLANNING & ENGINEERING DATED OCT. 1971 RECORDED SOUTH ESSEX REGISTRY OF DEEDS PLAN BOOK 121 PLAN 12.
2. PLAN OF LAND PREPARED FOR BALDINELLI'S BOWL-A-WAY, INC. PREPARED BY W. C. CAMMETT ENGINEERING, REVISED DATE AUGUST 19, 1992 RECORDED SOUTH ESSEX REGISTRY OF DEEDS PLAN BOOK 277 PLAN 37.
3. 1903 STATE HIGHWAY LAYOUT.
4. 1926 ALTERATION STATE HIGHWAY LAYOUT.

NOTES

1. ORIENTATION IS TO MASS MAINLAND SPC NAD 1983 BASED ON MULTIPLE GNSS RTK OBSERVATIONS.
2. STATUS OF RIGHT OF WAYS SHOWN AS PUBLIC OR PRIVATE ARE BASED ON REFERENCED DEEDS AND PLANS. NO WARRANTY IS EXPRESSED OR IMPLIED.
3. THIS SURVEY IS NOT A CERTIFICATION TO OWNERSHIP OR TITLE OF LANDS SHOWN. OWNERSHIP AND ENCUMBRANCES ARE MATTERS OF TITLE EXAMINATION NOT OF A BOUNDARY SURVEY. THE INTENT OF THIS PLAN IS TO ESTABLISH THE BOUNDARY LINES OF DEEDS REFERENCED HEREON. OWNERSHIP OF ADJOINING PROPERTIES IS ACCORDING TO ASSESSOR'S RECORDS. THIS PLAN MAY OR MAY NOT INDICATE ALL ENCUMBRANCES WHETHER EXPRESSED, IMPLIED OR PRESCRIPTIVE.
4. THE BARN AS SHOWN WAS IN PLACE AT DATE OF THE SITE DETAILS SURVEY. IT HAS SINCE BEEN RAZED.

RECORD OWNER

80 HAVERHILL ROAD, LLC

ASSESSOR REFERENCE

AMESBURY ASSESSOR'S MAP 85 LOT 59.

I CERTIFY THAT THE PROPERTY LINES SHOWN ARE THE LINES DIVIDING EXISTING OWNERSHIPS, AND THE LINES OF STREETS AND WAYS SHOWN ARE THOSE OF PUBLIC OR PRIVATE STREETS OR WAYS ALREADY ESTABLISHED, AND NO NEW LINES FOR DIVISION OF EXISTING OWNERSHIPS OR FOR NEW WAYS ARE SHOWN.

CHAPTER 41 SECTION 81X

COMMONWEALTH OF MASSACHUSETTS — MICHAEL J. SERGI No. 33191 — PROFESSIONAL LAND SURVEYOR

MICHAEL J. SERGI P.L.S. — DATE 10/30/24

THE CERTIFICATION SHOWN ABOVE IS INTENDED TO MEET REGISTRATION REQUIREMENTS AND IS NOT A CERTIFICATION TO TITLE OR OWNERSHIP OF PROPERTY SHOWN.OWNERSHIP OF ADJOINING PROPERTIES ARE ACCORDING TO ASSESSORS RECORDS.

GRAPHIC SCALE
20 0 10 20 40 80
(IN FEET)
1 inch = 20'

PREPARED FOR
80 HAVERHILL ROAD, LLC
80 HAVERHILL ROAD
AMESBURY, MA

NO.	DATE	DESCRIPTION	BY

MEI — MILLENNIUM ENGINEERING, INC.
ENGINEERING AND LAND SURVEYING
62 ELM ST. SALISBURY, MA 01952 (978) 463-8980
13 HAMPTON RD. EXETER, NH 03833 (603) 778-0528

SCALE: 1"=20' | CALC. BY: P.D.B.
DATE: OCT. 28, 2024 | CHKD. BY: M.J.S.
PROJECT: M234276

SITE PLAN
IN
AMESBURY, MA
AT
80 HAVERHILL ROAD

BOUNDARY PLAN

SHEET: C-3

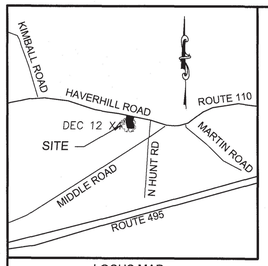

LOCUS MAP
1"=1,500'

BASIS OF BEARINGS

MASSACHUSETTS STATE PLANE
COORDINATE SYSTEM
NAD–83

OWNER OF RECORD

80 HAVERHILL ROAD, LLC
BK. 41666 PG. 459

PLAN REFERENCES

PLAN BOOK 121 PLAN 12
1926 S.H.L.O.

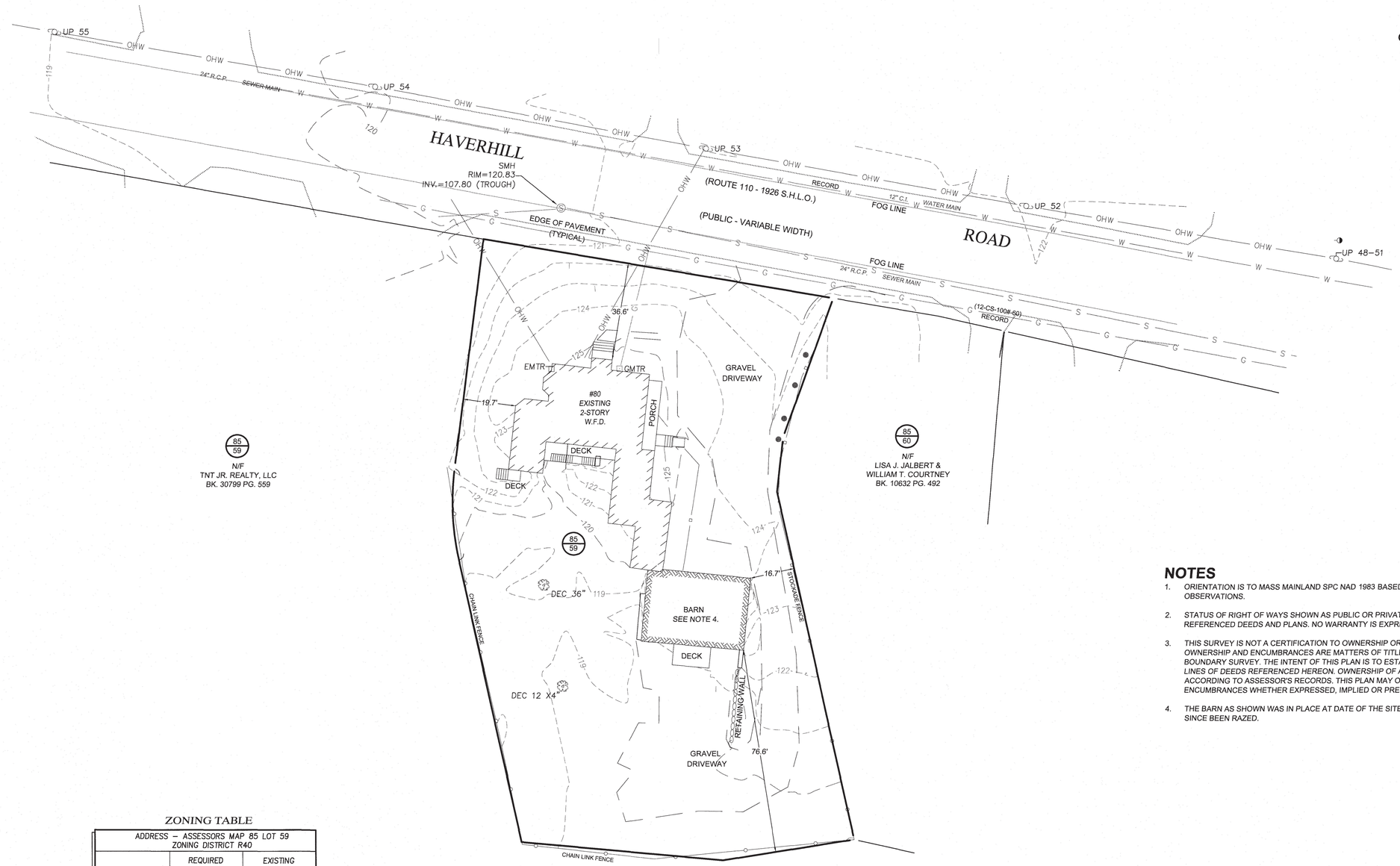

NOTES

1. ORIENTATION IS TO MASS MAINLAND SPC NAD 1983 BASED ON MULTIPLE GNSS RTK OBSERVATIONS.
2. STATUS OF RIGHT OF WAYS SHOWN AS PUBLIC OR PRIVATE ARE BASED ON REFERENCED DEEDS AND PLANS. NO WARRANTY IS EXPRESSED OR IMPLIED.
3. THIS SURVEY IS NOT A CERTIFICATION TO OWNERSHIP OR TITLE OF LANDS SHOWN. OWNERSHIP AND ENCUMBRANCES ARE MATTERS OF TITLE EXAMINATION NOT OF A BOUNDARY SURVEY. THE INTENT OF THIS PLAN IS TO ESTABLISH THE BOUNDARY LINES OF DEEDS REFERENCED HEREON. OWNERSHIP OF ADJOINING PROPERTIES IS ACCORDING TO ASSESSOR'S RECORDS. THIS PLAN MAY OR MAY NOT INDICATE ALL ENCUMBRANCES WHETHER EXPRESSED, IMPLIED OR PRESCRIPTIVE.
4. THE BARN AS SHOWN WAS IN PLACE AT DATE OF THE SITE DETAILS SURVEY. IT HAS SINCE BEEN RAZED.

ZONING TABLE

ADDRESS – ASSESSORS MAP 85 LOT 59 ZONING DISTRICT R40		
	REQUIRED	EXISTING
LOT AREA:	40,000 S.F.	27,332 S.F.
LOT FRONTAGE:	140 FT.	132.84 FT.
FRONT SETBACK:	40 FT.	36.6 FT.
SIDE SETBACK:	25 FT.	16.7 FT.
REAR SETBACK:	50 FT.	76.6 FT.
BLDG HEIGHT:	35 FT.	**
MAX. STORIES	2.5	2
MAX. BLDG AREA:	15%	13.5%
MIN OPEN SPACE:	50%	61.5%

LEGEND

S.H.L.O.	STATE HIGHWAY LAYOUT
—120—	EXISTING ELEVATION CONTOUR
UPOLE	UTILITY POLE
—OHW—	OVERHEAD WIRE
SMH	SEWER MANHOLE
—W—	WATER
—S—	SEWER
—G—	GAS
N/F	NOW OR FORMERLY
0/00	ASSESSORS MAP# PARCEL#

UTILITY NOTES

1. THE LOCATION OF ALL UNDERGROUND UTILITIES SHOWN HEREON ARE APPROXIMATE AND ARE BASED ON A COMBINATION OF READILY OBSERVABLE FIELD LOCATIONS AND COMPILED INFORMATION FROM PLANS SUPPLIED BY VARIOUS UTILITY COMPANIES, THE CLIENT AND GOVERNMENT AGENCIES. THERE IS NO GUARANTEE THAT ALL UTILITIES ARE SHOWN. IN ACCORDANCE WITH RSA 374 NOTIFY DIG–SAFE 811 BEFORE ANY EXCAVATION.

GRAPHIC SCALE
20 0 10 20 40 80
(IN FEET)
1 inch = 20'

COMMONWEALTH OF MASSACHUSETTS
MICHAEL J. SEROSI
No. 23191
PROFESSIONAL LAND SURVEYOR

PREPARED FOR

80 HAVERHILL ROAD, LLC
80 HAVERHILL ROAD
AMESBURY, MA

NO.	DATE	DESCRIPTION	BY

MEI
MILLENNIUM ENGINEERING, INC.
ENGINEERING AND LAND SURVEYING
62 ELM ST. SALISBURY, MA 01952 (978) 463–8980
13 HAMPTON RD. EXETER, NH 03833 (603) 778–0528

SCALE: 1"=20' | CALC. BY: P.D.B.
DATE: OCT. 28, 2024 | CHKD. BY: M.J.S.
PROJECT: M234276

SITE PLAN
IN
AMESBURY, MA
AT
80 HAVERHILL ROAD

EXISTING CONDITIONS

SHEET: C–4

PARKING REQUIREMENTS

FOR DWELLING OR APARTMENT HOUSE USE, 1.5 SPACES PER DWELLING OR APARTMENT UNIT ARE REQUIRED.
(SECTION VIII. TABLE OF OFF-STREET PARKING REGULATIONS)

TOTAL NUMBER OF UNITS=8

8 UNITS X 1.5 PARKING SPACES PER UNIT = 12 SPACES REQUIRED

TOTAL NUMBER OF PARKING SPACES PROVIDED = 17 SPACES

NOTES:

1) ALL PROPOSED WALKWAY AND PATIO SURFACES SHALL BE CONSTRUCTED OF PERVIOUS MATERIAL.

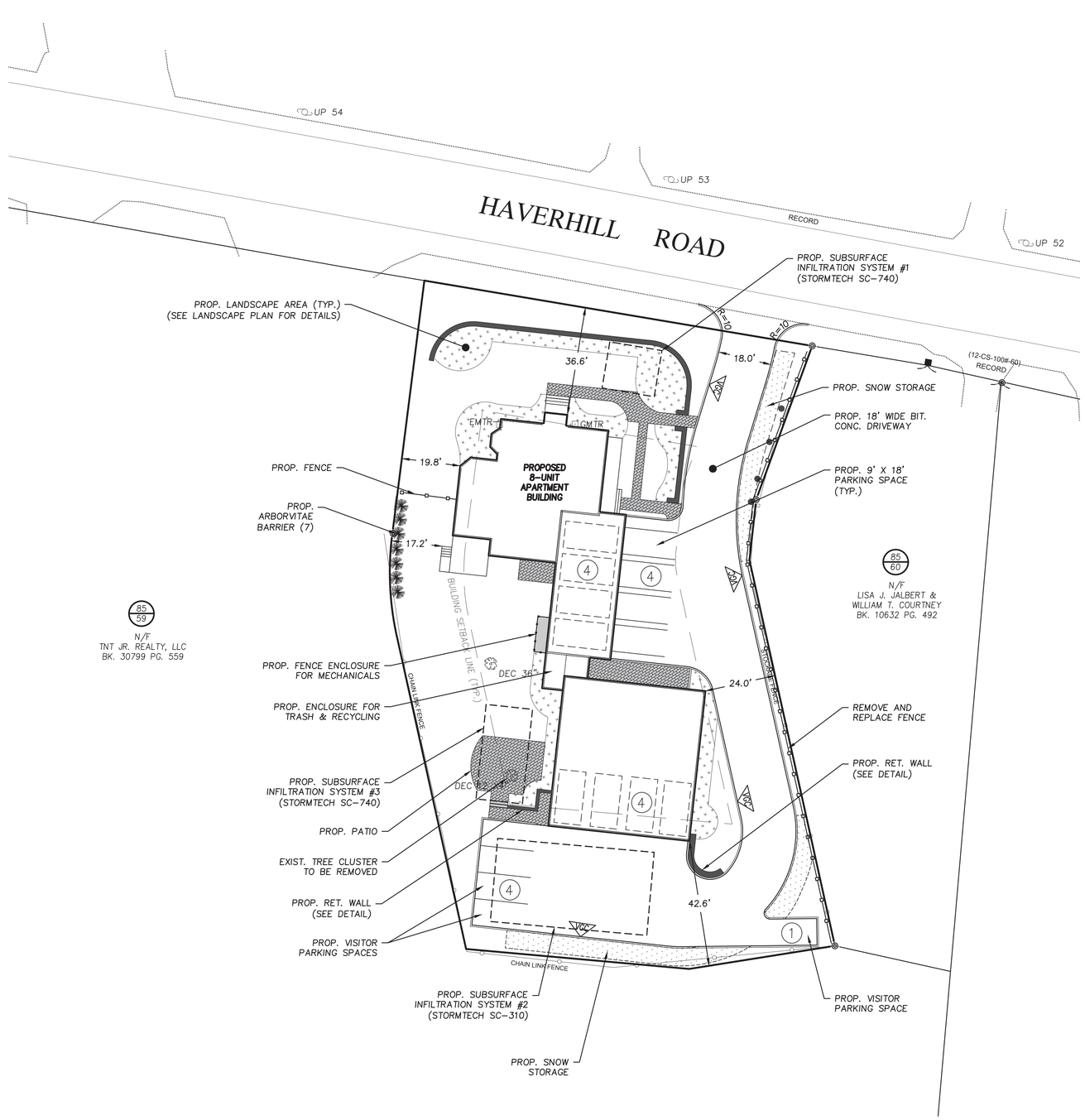

FOR REGISTRY USE

AMESBURY PLANNING BOARD APPROVAL

DATE

CITY OF AMESBURY
OFFICE OF THE CITY OF THE CLERK

THIS IS TO CERTIFY THAT ON _____ I RECEIVED FROM THE AMESBURY PLANNING BOARD CERTIFICATION OF ITS APPROVAL OF THIS PLAN AND THAT DURING THE (20) TWENTY DAYS NEXT FOLLOWING I HAVE RECEIVED NO NOTICE OF ANY APPEAL FROM SAID DECISION.

CLERK DATE

GRAPHIC SCALE
20 0 10 20 40 80
(IN FEET)
1 inch = 20'

COMMONWEALTH OF MASSACHUSETTS
JAMES T. MELVIN
CIVIL
No. 52963
REGISTERED PROFESSIONAL ENGINEER

PREPARED FOR

80 HAVERHILL ROAD, LLC
80 HAVERHILL ROAD
AMESBURY, MA

NO.	DATE	DESCRIPTION	BY
1	12/3/24	REVISIONS FROM PRELIM. HEARING	S.R.C.

MEI
MILLENNIUM ENGINEERING, INC.
ENGINEERING AND LAND SURVEYING
62 ELM ST. SALISBURY, MA 01952 (978) 463-8980
13 HAMPTON RD. EXETER, NH 03833 (603) 778-0528

SCALE: 1"=20' | CALC. BY: S.R.C.
DATE: NOV. 8, 2024 | CHKD. BY: E.W.B.
PROJECT: M234276

SITE PLAN
IN
AMESBURY, MA
AT
80 HAVERHILL ROAD

SITE PLAN

SHEET: C-5

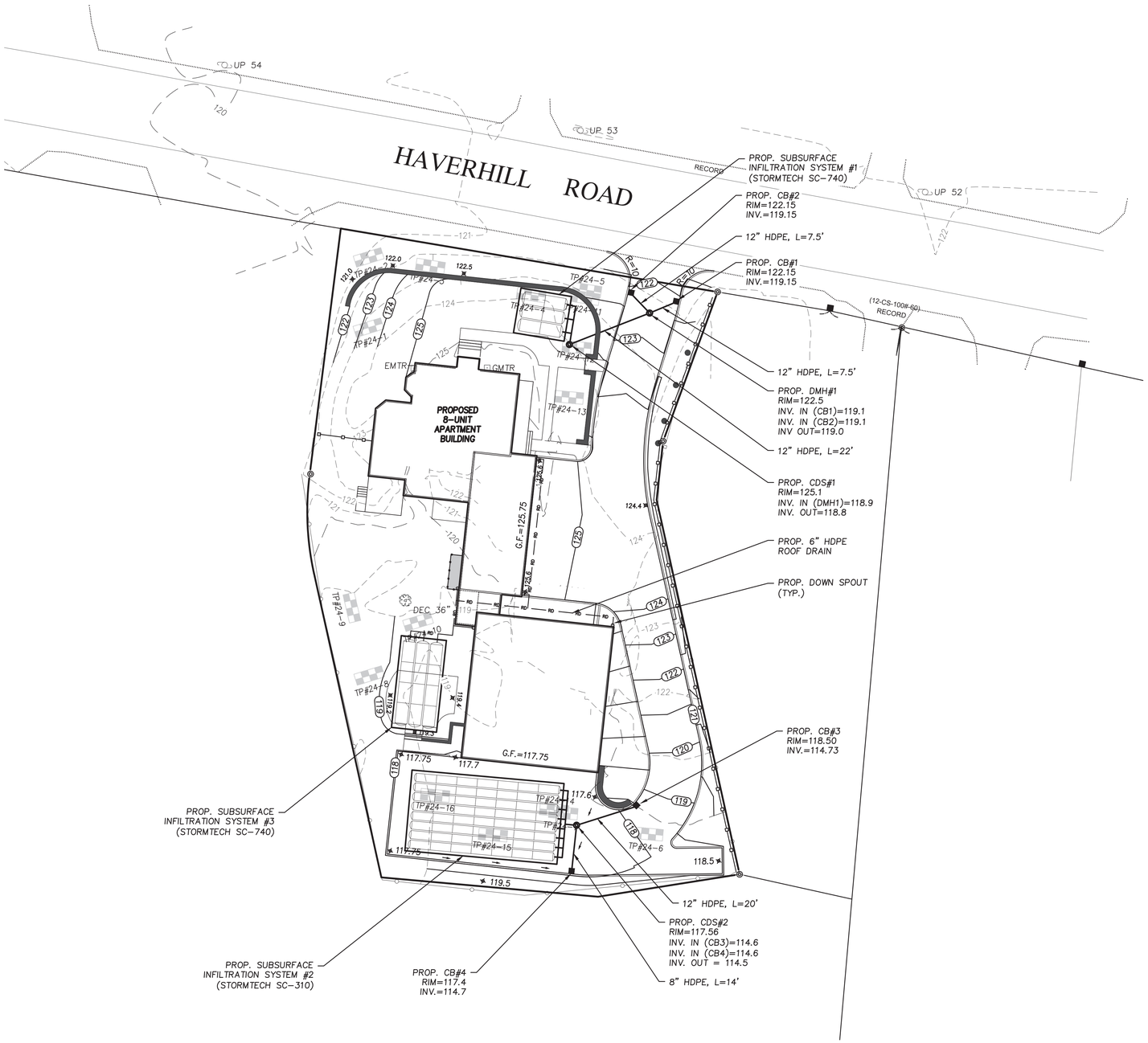

FOR REGISTRY USE

AMESBURY PLANNING BOARD APPROVAL

DATE

CITY OF AMESBURY
OFFICE OF THE CITY OF THE CLERK

THIS IS TO CERTIFY THAT ON _____ I RECEIVED FROM THE AMESBURY PLANNING BOARD CERTIFICATION OF ITS APPROVAL OF THIS PLAN AND THAT DURING THE (20) TWENTY DAYS NEXT FOLLOWING I HAVE RECEIVED NO NOTICE OF ANY APPEAL FROM SAID DECISION.

CLERK DATE

GRAPHIC SCALE
20 0 10 20 40 80
(IN FEET)
1 inch = 20'

COMMONWEALTH OF MASSACHUSETTS
JAMES T. MELVIN
CIVIL
No. 52965
REGISTERED PROFESSIONAL ENGINEER

PREPARED FOR

80 HAVERHILL ROAD, LLC
80 HAVERHILL ROAD
AMESBURY, MA

NO.	DATE	DESCRIPTION	BY
1	12/3/24	REVISIONS FROM PRELIM. HEARING	S.R.C.

MEI
MILLENNIUM ENGINEERING, INC.
ENGINEERING AND LAND SURVEYING
62 ELM ST. SALISBURY, MA 01952 (978) 463-8980
13 HAMPTON RD. EXETER, NH 03833 (603) 778-0528

SCALE: 1"=20' | CALC. BY: S.R.C.
DATE: NOV. 8, 2024 | CHKD. BY: E.W.B. | PROJECT: M234276

SITE PLAN
IN
AMESBURY, MA
AT
80 HAVERHILL ROAD

GRADING & DRAINAGE PLAN

SHEET: C-6

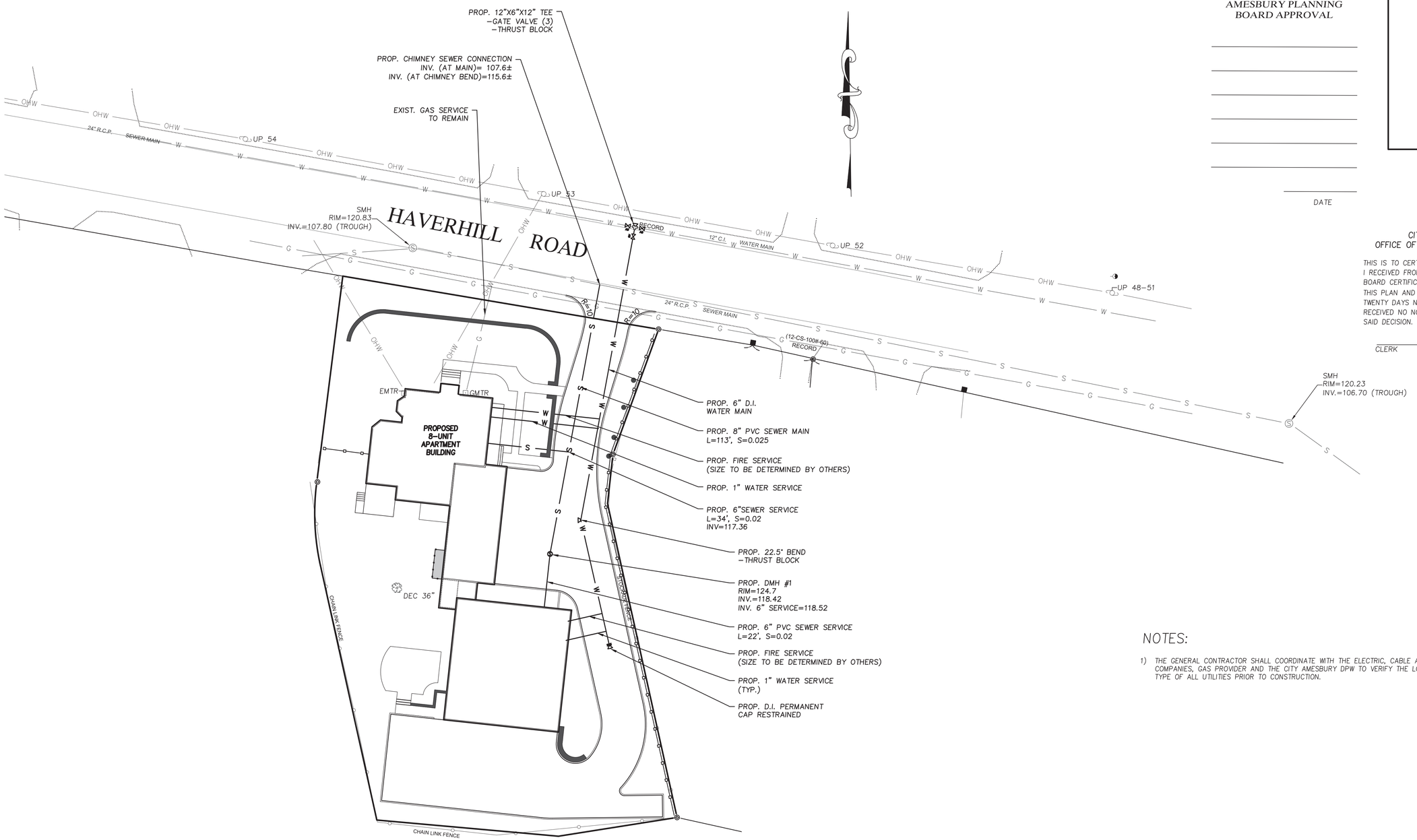

AMESBURY PLANNING
BOARD APPROVAL

DATE

FOR REGISTRY USE

CITY OF AMESBURY
OFFICE OF THE CITY OF THE CLERK

THIS IS TO CERTIFY THAT ON _____
I RECEIVED FROM THE AMESBURY PLANNING BOARD CERTIFICATION OF ITS APPROVAL OF THIS PLAN AND THAT DURING THE (20) TWENTY DAYS NEXT FOLLOWING I HAVE RECEIVED NO NOTICE OF ANY APPEAL FROM SAID DECISION.

CLERK DATE

NOTES:

1) THE GENERAL CONTRACTOR SHALL COORDINATE WITH THE ELECTRIC, CABLE AND TELEPHONE COMPANIES, GAS PROVIDER AND THE CITY AMESBURY DPW TO VERIFY THE LOCATION, SIZE AND TYPE OF ALL UTILITIES PRIOR TO CONSTRUCTION.

GRAPHIC SCALE
20 0 10 20 40 80
(IN FEET)
1 inch = 20'

COMMONWEALTH OF MASSACHUSETTS
JAMES T. MELVIN
CIVIL
No. 52963
REGISTERED PROFESSIONAL ENGINEER

PREPARED FOR

80 HAVERHILL ROAD, LLC
80 HAVERHILL ROAD
AMESBURY, MA

NO.	DATE	DESCRIPTION	BY
1	12/3/24	REVISIONS FROM PRELIM. HEARING	S.R.C.

MEI
MILLENNIUM ENGINEERING, INC.
ENGINEERING AND LAND SURVEYING
62 ELM ST. SALISBURY, MA 01952 (978) 463–8980
13 HAMPTON RD. EXETER, NH 03833 (603) 778–0528

SCALE: 1"=20' | CALC. BY: S.R.C.
DATE: NOV. 8, 2024 | CHKD. BY: E.W.B.
PROJECT: M234276

SITE PLAN
IN
AMESBURY, MA
AT
80 HAVERHILL ROAD

UTILITIES
PLAN

SHEET: C–7

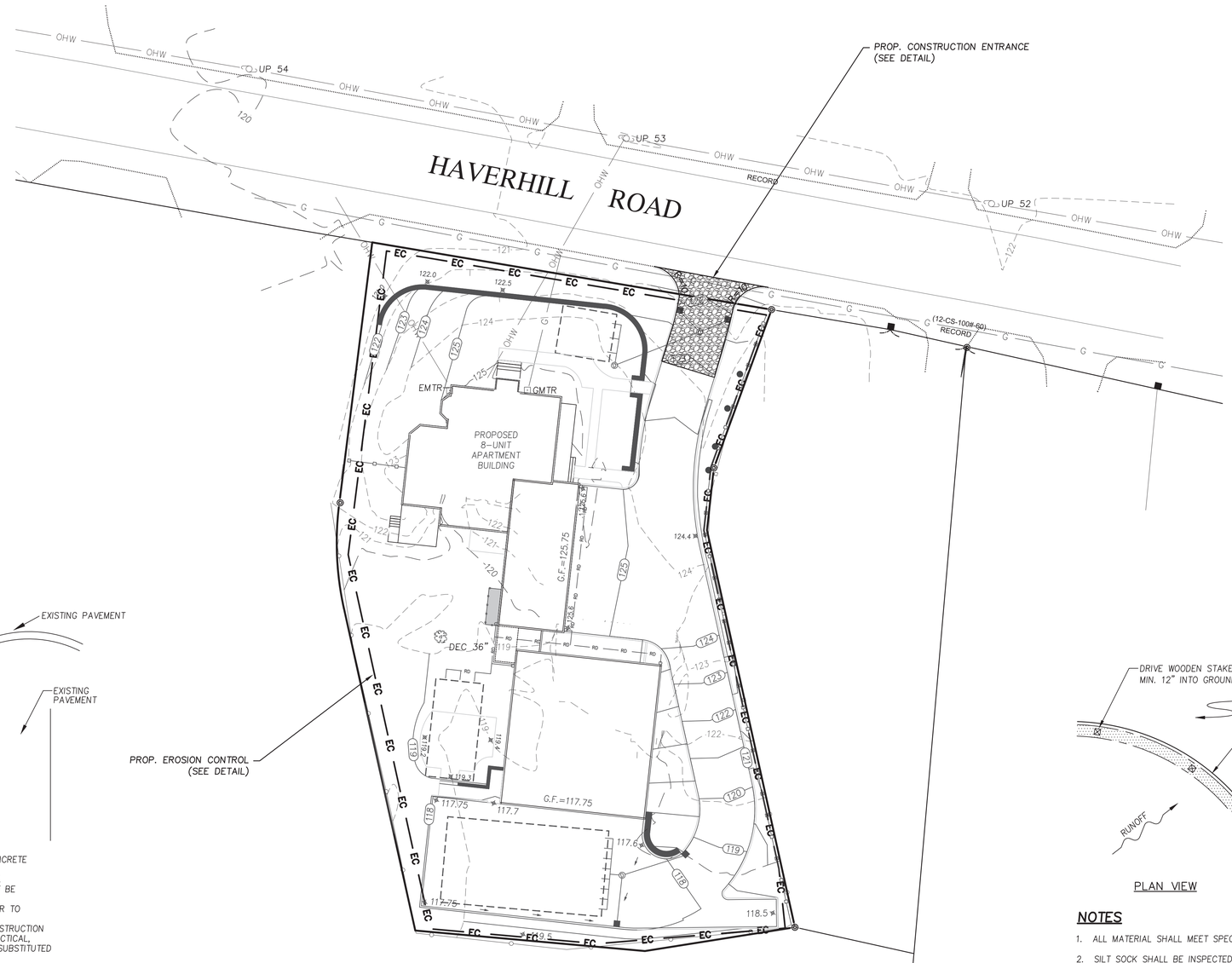

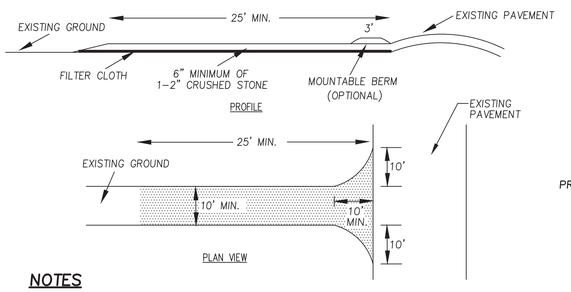

NOTES

1. STONE SHALL BE 1-1/2"-2" STONE, RECLAIMED STONE, OR RECYCLED CONCRETE EQUIVALENT.
2. THE LENGTH OF THE STABILIZED ENTRANCE SHALL NOT BE LESS THAN 25'.
3. THE THICKNESS OF THE STONE FOR THE STABILIZED ENTRANCE SHALL NOT BE LESS THAN 6".
4. GEOTEXTILE FILTER CLOTH SHALL BE PLACED OVER THE ENTIRE AREA PRIOR TO PLACING THE STONE.
5. ALL SURFACE WATER THAT IS FLOWING TO OR DIVERTED TOWARD THE CONSTRUCTION ENTRANCE SHALL BE PIPED BENEATH THE ENTRANCE. IF PIPING IS IMPRACTICAL, A BERM WITH 5:1 SLOPES THAT CAN BE CROSSED BY VEHICLES MAY BE SUBSTITUTED FOR THE PIPE.
6. THE ENTRANCE SHALL BE MAINTAINED IN A CONDITION THAT WILL PREVENT TRACKING OR FLOWING OF SEDIMENT ONTO PUBLIC RIGHTS-OF-WAY. THIS MAY REQUIRE PERIODIC TOP-DRESSING WITH ADDITIONAL STONE AS CONDITIONS DEMAND AND REPAIR AND/OR CLEANOUT OF ANY MEASURES USED TO TRAP SEDIMENT. ALL SEDIMENT SPILLED, WASHED, OR TRACKED ONTO PUBLIC RIGHTS-OF-WAY MUST BE REMOVED PROMPTLY.
7. WHEELS SHALL BE CLEANED TO REMOVE MUD PRIOR TO ENTRANCE ONTO PUBLIC RIGHTS-OF-WAY. WHEN WASHING IS REQUIRED, IT SHALL BE DONE ON AN AREA STABILIZED WITH STONE WHICH DRAINS INTO AN APPROVED SEDIMENT TRAPPING DEVICE.

STABILIZED CONSTRUCTION ENTRANCE

N.T.S.

FOR REGISTRY USE

AMESBURY PLANNING BOARD APPROVAL

_____

_____

_____

_____

_____

_____

_____
DATE

CITY OF AMESBURY
OFFICE OF THE CITY OF THE CLERK

THIS IS TO CERTIFY THAT ON _____ I RECEIVED FROM THE AMESBURY PLANNING BOARD CERTIFICATION OF ITS APPROVAL OF THIS PLAN AND THAT DURING THE (20) TWENTY DAYS NEXT FOLLOWING I HAVE RECEIVED NO NOTICE OF ANY APPEAL FROM SAID DECISION.

_____
CLERK DATE

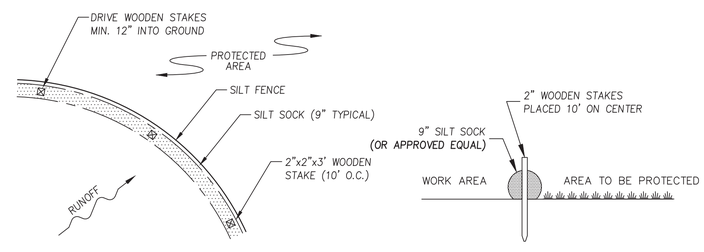

NOTES

1. ALL MATERIAL SHALL MEET SPECIFICATIONS BY FILTREXX OR APPROVED EQUAL.
2. SILT SOCK SHALL BE INSPECTED WITHIN 24 HOURS AFTER EACH RAINFALL AND AT LEAST DAILY DURING PROLONGED RAINFALL. ANY REPAIRS THAT ARE REQUIRED SHALL BE MADE IMMEDIATELY.
3. THE CONRACTOR SHALL REMOVE SEDIMENT AT THE BASE OF THE UPSLOPE SIDE OF THE SILT SOCK WHEN ACCUMULATION HAS REACHED 1/2 OF THE EFECTIVE HEIGHT OF THE SILT SOCK.
4. SILT SOCK SHALL BE MAINTAINED UNTIL DISTURBED AREA ABOVE THE DEVICE HAS BEEN PERMANENTLY STABILIZED AND CONSTRUCTION ACTIVITY HAS BEEN COMPLETED.
5. SEDIMENT DEPOSITS THAT ARE REMOVED OR LEFT IN PLACE AFTER THE SOCK HAS BEEN REMOVED SHALL BE GRADED TO CONFORM WITH THE EXISTING TOPOGRAPHY AND VEGETATED.

SILT SOCK INSTALLATION DETAIL

N.T.S.

GRAPHIC SCALE
20 0 10 20 40 80
(IN FEET)
1 inch = 20'

COMMONWEALTH OF MASSACHUSETTS
JAMES T. MELVIN
CIVIL
No. 32963
REGISTERED PROFESSIONAL ENGINEER

PREPARED FOR

80 HAVERHILL ROAD, LLC
80 HAVERHILL ROAD
AMESBURY, MA

NO.	DATE	DESCRIPTION	BY
1	12/3/24	REVISIONS FROM PRELIM. HEARING	S.R.C.

MEI
MILLENNIUM ENGINEERING, INC.
ENGINEERING AND LAND SURVEYING
62 ELM ST. SALISBURY, MA 01952 (978) 463-8980
13 HAMPTON RD. EXETER, NH 03833 (603) 778-0528

SCALE: 1"=20' | CALC. BY: S.R.C.
DATE: NOV. 8, 2024 | CHKD. BY: E.W.B. | PROJECT: M234276

SITE PLAN
IN
AMESBURY, MA
AT
80 HAVERHILL ROAD

EROSION & SEDIMENTATION CONTROL PLAN

SHEET: C-8

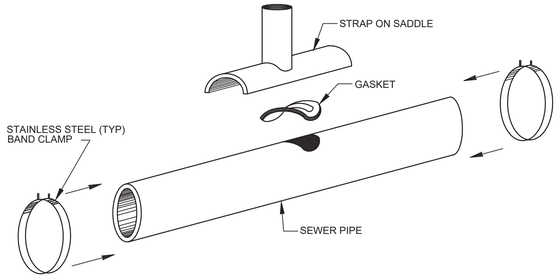

SADDLE CONNECTION - PLAN
NOT TO SCALE

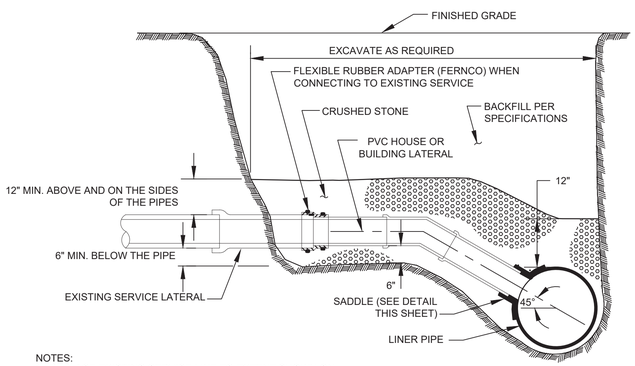

NOTES:
1. REPLACE EXISTING SERVICE LINE TO EXTENT SHOWN ON PLAN/PROFILES AND AS SPECIFIED.

SADDLE CONNECTION - SECTION
NOT TO SCALE

SADDLE CONNECTION DETAIL

N.T.S.

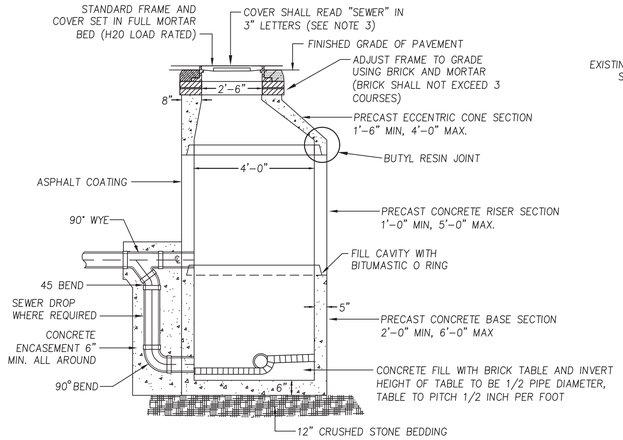

NOTES:
1) SEWER MANHOLES SHALL CONFORM TO ASTM C478 AND ASTM C185
2) STEEL REINFORCED COPOLYMER POLYPROPYLENE PLASTIC STEPS SHALL CONFORM TO LATEST ASTM C478 SPEC.
3) COVER SHALL BE LEBARON FOUNDRY (MODEL NO. LA246), MECHANICS IRON FOUNDRY, NEEHAN FOUNDRY, OR EQUAL.
4) ALL PENETRATIONS IN THE MANHOLE FOR INSERTION OF PIPING SHALL BE SEALED WITH KOR-N-SEAL FLEXIBLE PIPE CONNECTION.
5) FLAT TOP STRUCTURES SHALL BE PRECAST SECTIONS AND HAVE A 28 DAY COMPRESSIVE STRENGTH OF 5000 PSI REINFORCED FOR AASHTO H-20 LOADING.
6) CONICAL SECTIONS MAY BE SUBSTITUTED FOR FLAT-TOP STRUCTURES IN AREAS WHERE MORE THAN 4 FEET OF COVER IS PROVIDED FOR DRAIN PIPE.

PRECAST SEWER DETAIL

N.T.S.

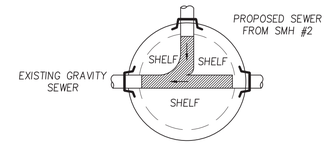

SMH #1 PLAN VIEW

CITY OF AMESBURY
OFFICE OF THE CITY OF THE CLERK

THIS IS TO CERTIFY THAT ON _____ I RECEIVED FROM THE AMESBURY PLANNING BOARD CERTIFICATION OF ITS APPROVAL OF THIS PLAN AND THAT DURING THE (20) TWENTY DAYS NEXT FOLLOWING I HAVE RECEIVED NO NOTICE OF ANY APPEAL FROM SAID DECISION.

CLERK DATE

FOR REGISTRY USE

AMESBURY PLANNING BOARD APPROVAL

_____

_____

_____

_____

_____

_____

DATE

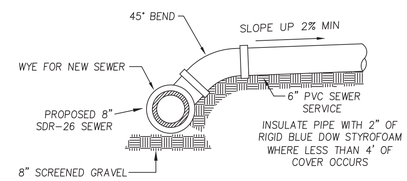

SEWER SERVICE DETAIL

N.T.S.

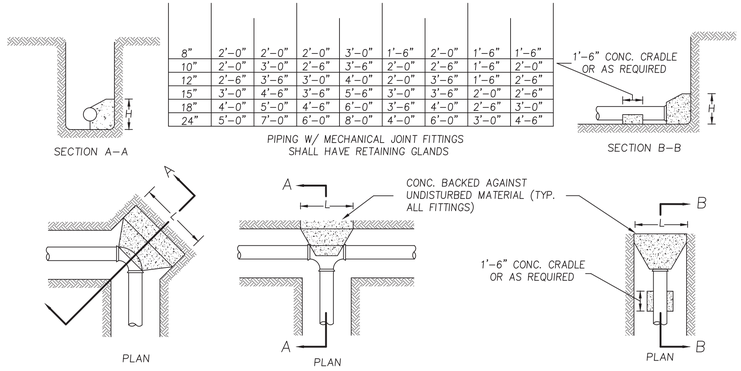

NOTES

1. VALUES SHOWN ARE FOR TEST PRESSURE OF 150 PSI WITH A 100 PSI SURGE ALLOWANCE.
2. THRUST BLOCKS SHALL NOT BE PLACED AGAINST THE FOLLOWING SOILS: PEAT, ORGANIC SILT AND ORGANIC SOILS, SOFT CLAY, RUBBISH FILL AND OTHER UNSUITABLE ARTIFICIAL FILL, SHATTERED SHALE, INORGANIC SILT AND VERY FINE SANDS.
3. POURED CONCRETE THRUST BLOCKS SHALL NOT COVER ANY JOINTS, CLAMPS, NUTS, BOLTS, ETC.

THRUST BLOCK DETAILS

N.T.S.

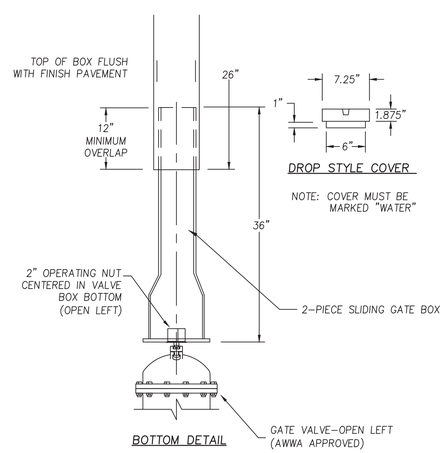

TYPICAL GATE VALVE BOX DETAIL

N.T.S.

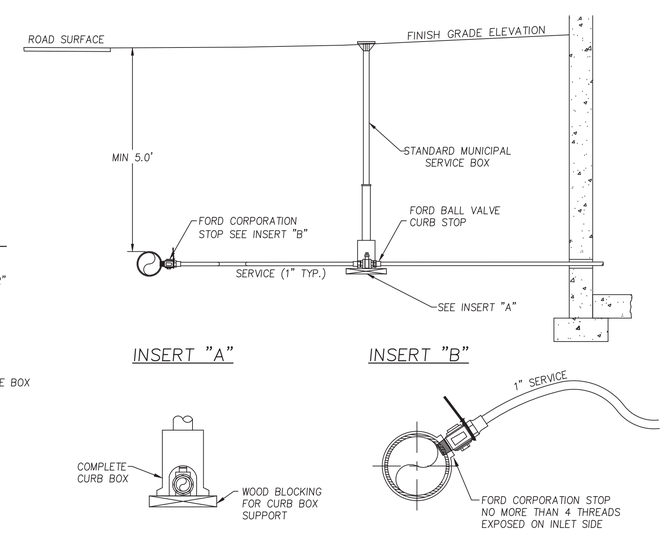

TYPICAL SERVICE CONNECTION

N.T.S.

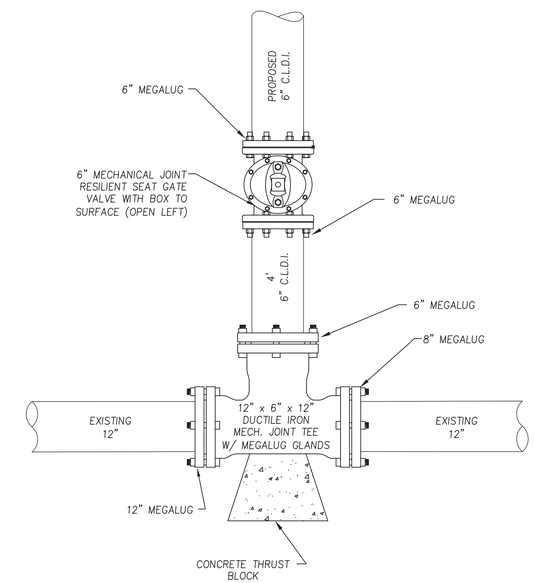

NOTES: 1) TIE IN SHALL BE COORDINATED WITH THE WATER DEPARTMENT.
2) THE CONTRACTOR IS RESPONSIBLE FOR ALL OFF-SITE NOTIFICATIONS TO IMPACTED PROPERTIES.

WATER MAIN CONNECTION DETAIL

N.T.S.

COMMONWEALTH OF MASSACHUSETTS
JAMES T. MELVIN
CIVIL
No. 52963
REGISTERED PROFESSIONAL ENGINEER

PREPARED FOR

80 HAVERHILL ROAD, LLC
80 HAVERHILL ROAD
AMESBURY, MA

NO.	DATE	DESCRIPTION	BY
1	12/3/24	REVISIONS FROM PRELIM. HEARING	S.R.C.

MEI
MILLENNIUM ENGINEERING, INC.
ENGINEERING AND LAND SURVEYING
62 ELM ST. SALISBURY, MA 01952 (978) 463-8980
13 HAMPTON RD. EXETER, NH 03833 (603) 778-0528

SCALE: AS NOTED | CALC. BY: S.R.C.
DATE: NOV. 8, 2024 | CHKD. BY: E.W.B.
PROJECT: M234276

SITE PLAN
IN
AMESBURY, MA
AT
80 HAVERHILL ROAD

DETAILS

SHEET: C-9

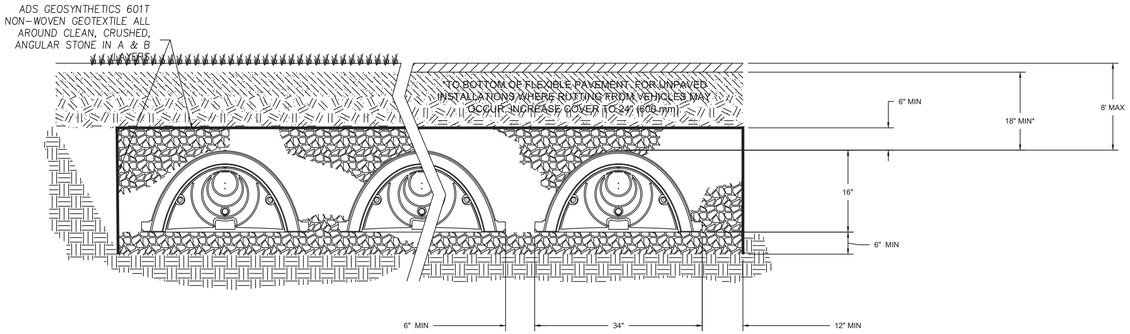

SUBSURFACE AREA	BOT. STONE ELEV.	BOT. CHAMBER ELEV.	TOP CHAMBER ELEV.	TOP STONE ELEV.	100 YR STORM ELEV.
#2	26.10	26.60	27.93	28.43	27.93

STORMTECH SC 310 INFILTRATION CHAMBER

N.T.S.

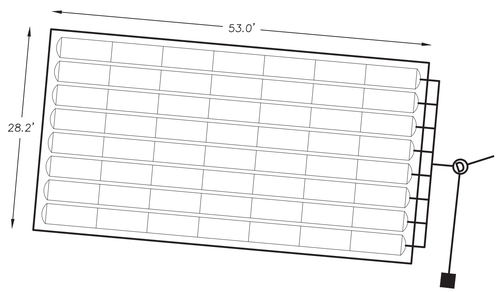

INFILTRATION SYSTEM #2

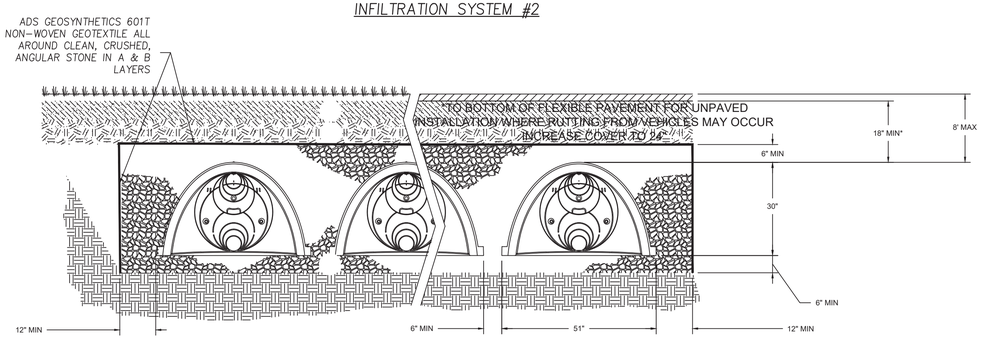

SUBSURFACE AREA	BOT. STONE ELEV.	BOT. CHAMBER ELEV.	TOP CHAMBER ELEV.	TOP STONE ELEV.	100 YR STORM ELEV.
#1	118.20	118.70	121.20	121.70	121.58
#3	114.50	115.00	117.50	118.00	117.00

STORMTECH SC 740 INFILTRATION CHAMBER

N.T.S.

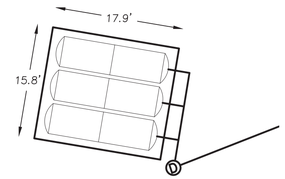

INFILTRATION SYSTEM #1

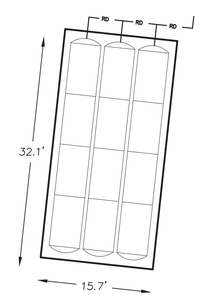

INFILTRATION SYSTEM #3

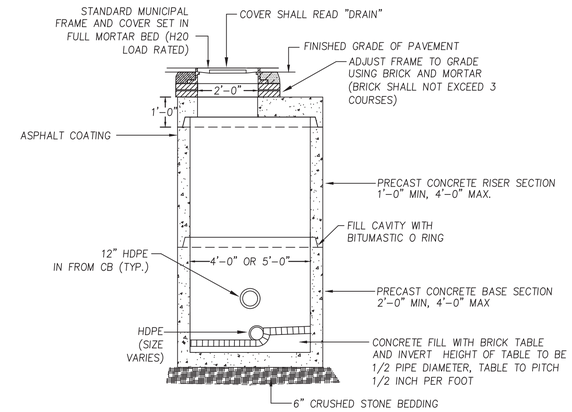

NOTES: 1) DRAIN MANHOLES SHALL CONFORM TO ASTM C478 AND ASTM C185
2) FLAT TOP STRUCTURES SHALL BE PRECAST SECTIONS AND HAVE A 28 DAY COMPRESSIVE STRENGTH OF 5000 PSI REINFORCED FOR AASHTO H-20 LOADING.
3) CONICAL SECTIONS MAY BE SUBSTITUTED FOR FLAT-TOP STRUCTURES IN AREAS WHERE MORE THAN 4 FEET OF COVER IS PROVIDED FOR DRAIN PIPE AND FOR ADDITIONAL CLEARANCE TO EXISTING UTILITIES.

PRECAST DRAIN MANHOLE DETAIL

N.T.S.

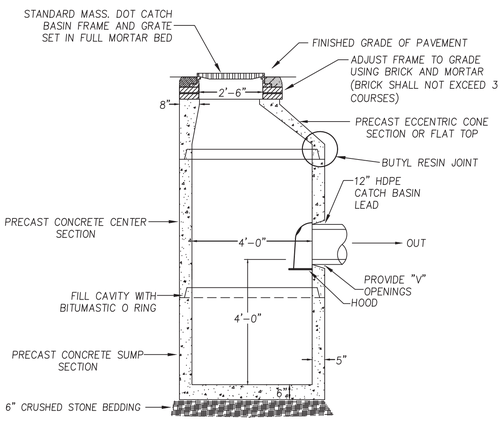

NOTES: 1) CATCH BASINS SHALL CONFORM TO ASTM C478 AND ASTM C185
2) FLAT TOP STRUCTURES SHALL BE PRECAST SECTIONS AND HAVE A 28 DAY COMPRESSIVE STRENGTH OF 5000 PSI REINFORCED FOR AASHTO H-20 LOADING.
3) CONICAL SECTIONS MAY BE SUBSTITUTED FOR FLAT-TOP STRUCTURES IN AREAS WHERE MORE THAN 4 FEET OF COVER IS PROVIDED FOR DRAIN PIPE.

PRECAST DEEP SUMP CATCH BASIN DETAIL

N.T.S.

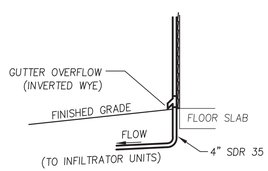

GUTTER DOWN SPOUT DETAIL

N.T.S.

FOR REGISTRY USE

AMESBURY PLANNING BOARD APPROVAL

DATE

CITY OF AMESBURY
OFFICE OF THE CITY OF THE CLERK

THIS IS TO CERTIFY THAT ON _____ I RECEIVED FROM THE AMESBURY PLANNING BOARD CERTIFICATION OF ITS APPROVAL OF THIS PLAN AND THAT DURING THE (20) TWENTY DAYS NEXT FOLLOWING I HAVE RECEIVED NO NOTICE OF ANY APPEAL FROM SAID DECISION.

CLERK DATE

COMMONWEALTH OF MASSACHUSETTS JAMES T. MELVIN CIVIL No. 52963 PROFESSIONAL ENGINEER

PREPARED FOR

80 HAVERHILL ROAD, LLC
80 HAVERHILL ROAD
AMESBURY, MA

NO.	DATE	DESCRIPTION	BY
1	12/3/24	REVISIONS FROM PRELIM. HEARING	S.R.C.

MEI
MILLENNIUM ENGINEERING, INC.
ENGINEERING AND LAND SURVEYING
62 ELM ST. SALISBURY, MA 01952 (978) 463-8980
13 HAMPTON RD. EXETER, NH 03833 (603) 778-0528

SCALE: AS NOTED | CALC. BY: S.R.C.
DATE: NOV. 8, 2024 | CHKD. BY: E.W.B.
PROJECT: M234276

SITE PLAN
IN
AMESBURY, MA
AT
80 HAVERHILL ROAD

DETAILS

SHEET: C-10

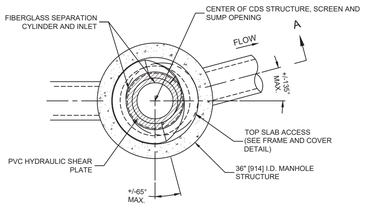

PLAN VIEW B-B
N.T.S.

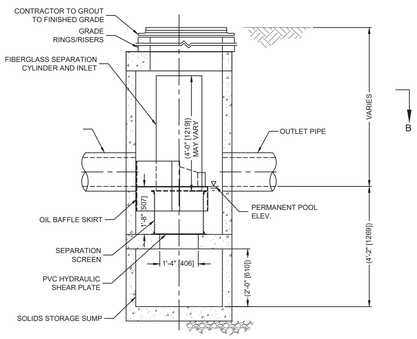

ELEVATION A-A

CONTECH CDS DETAIL

N.T.S.

FRAME AND COVER

(DIAMETER VARIES)
N.T.S.

GENERAL NOTES

1. CONTECH TO PROVIDE ALL MATERIALS UNLESS NOTED OTHERWISE.
2. DIMENSIONS MARKED WITH ( ) ARE REFERENCE DIMENSIONS. ACTUAL DIMENSIONS MAY VARY.
3. FOR FABRICATION DRAWINGS WITH DETAILED STRUCTURE DIMENSIONS AND WEIGHTS, PLEASE CONTACT YOUR CONTECH CONSTRUCTION PRODUCTS REPRESENTATIVE. www.contech-cpi.com
4. CDS WATER QUALITY STRUCTURE SHALL BE IN ACCORDANCE WITH ALL DESIGN DATA AND INFORMATION CONTAINED IN THIS DRAWING.
5. STRUCTURE SHALL MEET AASHTO HS20 AND CASTINGS SHALL MEET AASHTO M306 LOAD RATING, ASSUMING GROUNDWATER ELEVATION AT, OR BELOW, THE OUTLET PIPE INVERT ELEVATION. ENGINEER OF RECORD TO CONFIRM ACTUAL GROUNDWATER ELEVATION.
6. PVC HYDRAULIC SHEAR PLATE IS PLACED ON SHELF AT BOTTOM OF SCREEN CYLINDER. REMOVE AND REPLACE AS NECESSARY DURING MAINTENANCE CLEANING.

INSTALLATION NOTES

1. ANY SUB-BASE, BACKFILL DEPTH, AND/OR ANTI-FLOTATION PROVISIONS ARE SITE-SPECIFIC DESIGN CONSIDERATIONS AND SHALL BE SPECIFIED BY ENGINEER OF RECORD.
2. CONTRACTOR TO PROVIDE EQUIPMENT WITH SUFFICIENT LIFTING AND REACH CAPACITY TO LIFT AND SET THE CDS MANHOLE STRUCTURE (LIFTING CLUTCHES PROVIDED).
3. CONTRACTOR TO ADD JOINT SEALANT BETWEEN ALL STRUCTURE SECTIONS, AND ASSEMBLE STRUCTURE.
4. CONTRACTOR TO PROVIDE, INSTALL, AND GROUT PIPES. MATCH PIPE INVERTS WITH ELEVATIONS SHOWN.
5. CONTRACTOR TO TAKE APPROPRIATE MEASURES TO ASSURE UNIT IS WATER TIGHT, HOLDING WATER TO FLOWLINE INVERT MINIMUM. IT IS SUGGESTED THAT ALL JOINTS BELOW PIPE INVERTS ARE GROUTED.

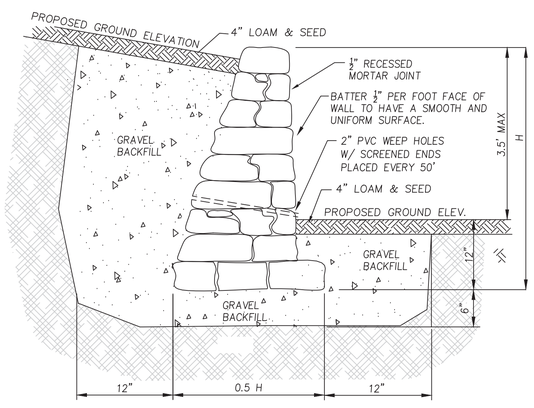

FIELD STONE MASONRY RETAINING WALL

N.T.S.

TEST PIT#24-1
ELEV. = 123.5

0" C^ – SANDY LOAM (FILL MIXTURE) 10YR 4/1 — 89"

ESHWT > 89" = 116.08
PERFORMED BY ALEX PARKER
ON 8/05/23

TEST PIT#24-2
ELEV. = 121.0

0" C^ – SANDY LOAM (FILL MIXTURE) 10YR 4/4 — 40"
2C – LOAMY FINE SAND (GRAVELLY) 2.5YR 6/3 — 95"

ESHWT > 95" = 113.08
PERFORMED BY ALEX PARKER
ON 8/05/23

TEST PIT#24-3
ELEV. = 122.5

0" C^ – SANDY LOAM (FILL MIXTURE) 10YR 4/4 — 93"

ESHWT > 93" = 114.75
PERFORMED BY ALEX PARKER
ON 8/05/23

TEST PIT#24-4
ELEV. = 124.0

0" A – SANDY LOAM (FINE) 10YR 3/2 — 8"
2C – LOAMY FINE SAND (GRAVELLY) 2.5YR 6/3 — 85"

ESHWT > 85" = 116.91
PERFORMED BY ALEX PARKER
ON 8/05/23

TEST PIT#24-5
ELEV. = 123.0

0" A – SANDY LOAM (FINE) 10YR 3/2 — 8"
2C – LOAMY FINE SAND (GRAVELLY) 2.5YR 6/3 — 92"

ESHWT > 92" = 115.33
PERFORMED BY ALEX PARKER
ON 8/05/23

TEST PIT#24-6
ELEV. = 119.75

0" A – SANDY LOAM (FINE) 10YR 3/2 — 7"
2C – LOAMY FINE SAND (GRAVELLY) 2.5YR 6/3 — 95"

ESHWT > 95" = 111.83
PERFORMED BY ALEX PARKER
ON 8/05/23

TEST PIT#24-7
ELEV. = 119.75

0" A – SANDY LOAM (FINE) 10YR 3/2 — 26"
2C – LOAMY FINE SAND (GRAVELLY) 2.5YR 6/3 — 85"

ESHWT > 85" = 112.66
PERFORMED BY ALEX PARKER
ON 8/05/23

TEST PIT#24-8
ELEV. = 118.85

0" ^C – SANDY LOAM (FILL MIXTURE) 10YR 4/4 — 21"
2C – LOAMY FINE SAND 2.5YR 6/8 — 78"

ESHWT > 78" = 112.35
PERFORMED BY ALEX PARKER
ON 8/05/23

TEST PIT#24-9
ELEV. = 118.9

0" ^C – SANDY LOAM (FILL MIXTURE) 10YR 4/4 — 28"
2C – LOAMY FINE SAND 2.5YR 6/8 — 82"

ESHWT > 82" = 112.06
PERFORMED BY ALEX PARKER
ON 8/05/23

TEST PIT#24-10
ELEV. = 118.9

0" A – SANDY LOAM (FINE) 10YR 4/4 — 10"
Bw – SANDY LOAM 10YR 4/6 — 14"
2C – LOAMY FINE SAND (GRAVELLY) 2.5YR 6/3 — 80"

ESHWT > 80" = 112.23
PERFORMED BY ALEX PARKER
ON 8/05/23

TEST PIT#24-11
ELEV. = 123.0

0" ^C – SANDY LOAM (FILL MIXTURE) 10YR 4/4 — 13"
2C – LOAMY FINE SAND (GRAVELLY) 2.5YR 6/8 — 129"

ESHWT = 101" = 114.58
PERFORMED BY ALEX PARKER
ON 8/05/23

TEST PIT#24-12
ELEV. = 124.0

0" ^C – SANDY LOAM (FILL MIXTURE) 10YR 4/2 — 15"
2C – LOAMY FINE SAND (GRAVELLY) 2.5YR 6/3 — 127"

ESHWT = 100" = 115.66
PERFORMED BY ALEX PARKER
ON 8/05/23

TEST PIT#24-13
ELEV. = 124.5

0" ^C – SANDY LOAM (FILL MIXTURE) 10YR 4/2 — 16"
2C – LOAMY FINE SAND (GRAVELLY) 2.5YR 6/3 — 127"

ESHWT = 110" = 116.33
PERFORMED BY ALEX PARKER
ON 8/05/23

TEST PIT#24-14
ELEV. = 119.50

0" ^C – SANDY LOAM (FILL MIXTURE) 10YR 4/2 — 20"
2C – LOAMY FINE SAND (GRAVELLY) 2.5YR 6/3 — 127"

ESHWT = 90" = 112.00
PERFORMED BY ALEX PARKER
ON 8/05/23

TEST PIT#24-15
ELEV. = 119.40

0" ^C – SANDY LOAM (FILL MIXTURE) 10YR 4/2 — 20"
2C – LOAMY FINE SAND (GRAVELLY) 2.5YR 6/3 — 127"

ESHWT = 92" = 111.73
PERFORMED BY ALEX PARKER
ON 8/05/23

TEST PIT#24-16
ELEV. = 119.00

0" ^C – SANDY LOAM (FILL MIXTURE) 10YR 4/2 — 28"
2C – LOAMY FINE SAND (GRAVELLY) 2.5YR 6/3 — 124"

ESHWT = 90" = 111.50
PERFORMED BY ALEX PARKER
ON 8/05/23

COMMONWEALTH OF MASSACHUSETTS
JAMES T. MELVIN
CIVIL
No. 32963
PROFESSIONAL ENGINEER

PREPARED FOR

80 HAVERHILL ROAD, LLC
80 HAVERHILL ROAD
AMESBURY, MA

NO.	DATE	DESCRIPTION	BY
1	12/3/24	REVISIONS FROM PRELIM. HEARING	S.R.C.

MEI
MILLENNIUM ENGINEERING, INC.
ENGINEERING AND LAND SURVEYING
62 ELM ST. SALISBURY, MA 01952 (978) 463-8980
13 HAMPTON RD. EXETER, NH 03833 (603) 778-0528

SCALE: AS NOTED | CALC. BY: S.R.C.
DATE: NOV. 8, 2024 | CHKD. BY: E.W.B.
PROJECT: M234276

SITE PLAN
IN
AMESBURY, MA
AT
80 HAVERHILL ROAD

DETAILS

SHEET: C-11